Copyright : These Drawings are the property of DP3 Architects, Ltd., and reuse on any other project without written permission will result in legal action.

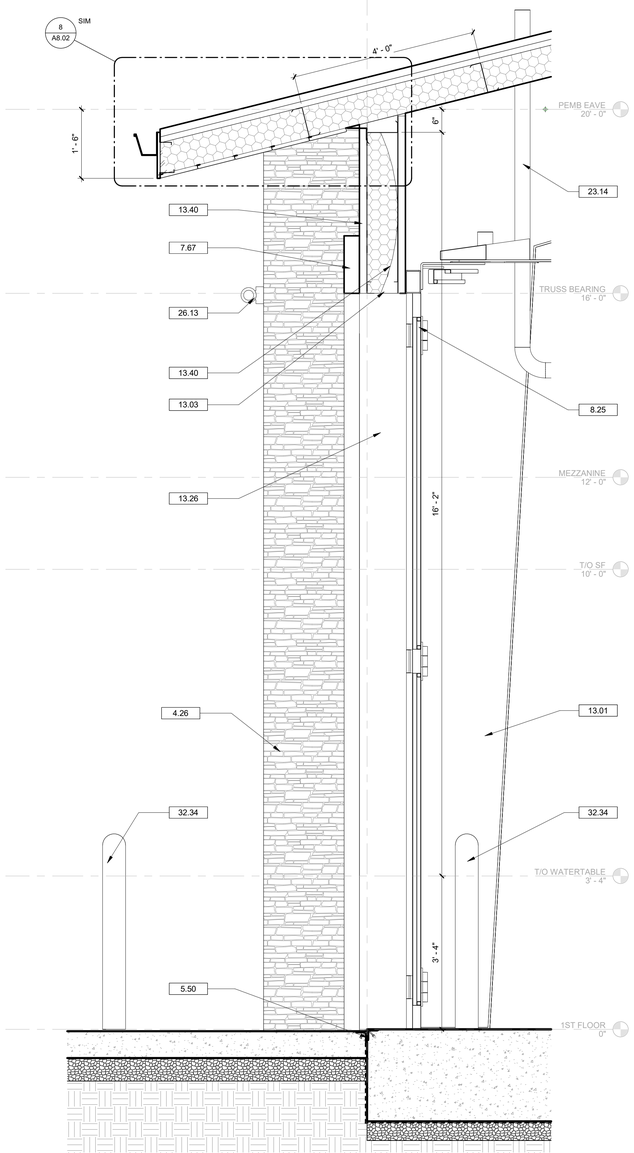

1 A7.01 WALL SECTION - PEMB @ FIRE APP BAY FOUR-FOLD DOOR SOUTH
3/4" = 1'-0"

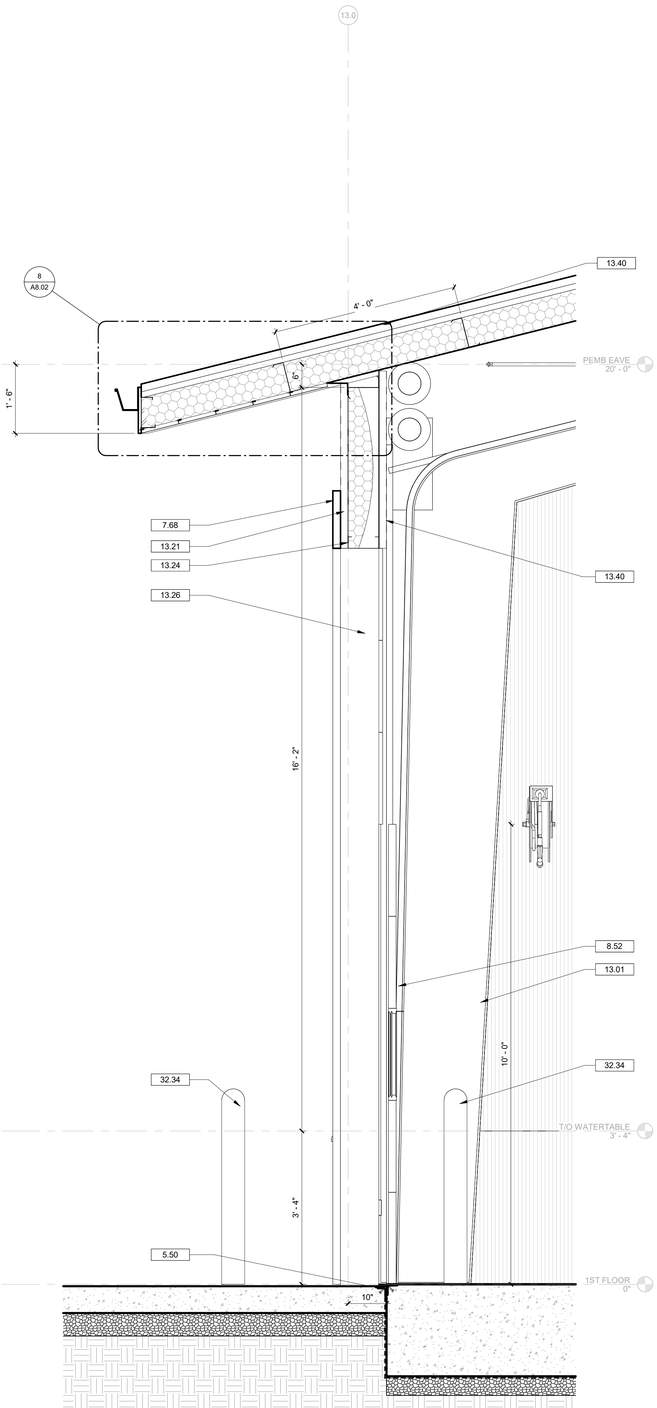

2 A7.01 WALL SECTION - PEMB @ FIRE APP BAY OVERHEAD DOOR NORTH
3/4" = 1'-0"

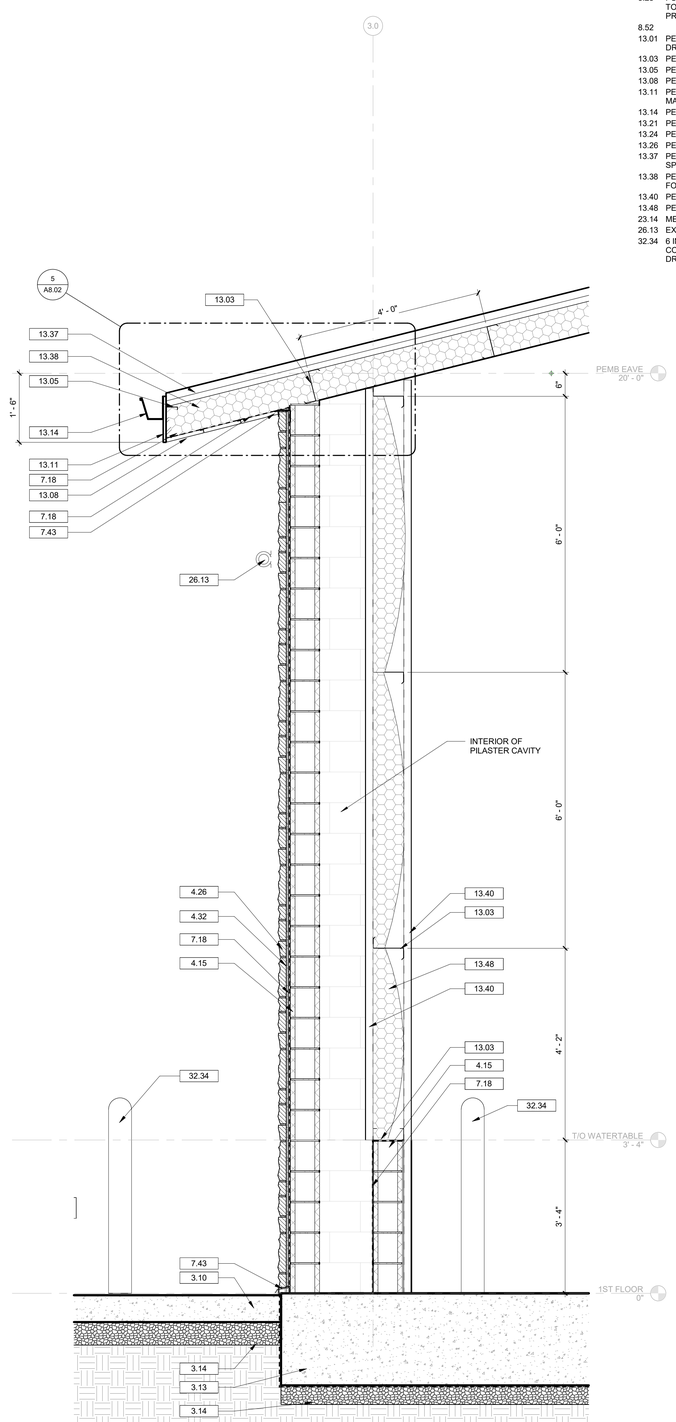

3 A7.01 WALL SECTION - PEMB @ FIRE APP BAY STONE PILASTER
3/4" = 1'-0"

DRAWING NOTES

3.10 CAST-IN-PLACE CONCRETE. REFER TO STRUCTURAL DRAWINGS.
3.13 REINFORCED CONCRETE SLAB ON GRADE. REFER TO STRUCTURAL DRAWINGS.
3.14 COMPACTED STONE. REFER TO STRUCTURAL DRAWINGS.
4.15 EXTERIOR 8 INCH X 8 INCH X 16 INCH CONCRETE MASONRY UNIT. REFER TO STRUCTURAL DRAWINGS FOR REINFORCEMENT. REFER TO WALL TYPE SCHEDULE.
4.26 MANUFACTURED STONE VENEER IN GROUT BED WITH WALL TIES. INSTALL PER MANUFACTURER'S INSTRUCTIONS.
4.32 MASONRY MORTAR. REFER TO STRUCTURAL DRAWINGS.
5.50 STEEL ANGLE THRESHOLD. (2) L3X3X1/2 STEEL ANGLES WELDED BACK TO BACK TO EACH OTHER AND OFFSET 1/2" IN DEPTH. REFER TO BUILDING DETAILS. TYPICAL AT ALL OVERHEAD AND FOUR-FOLD DOOR LOCATIONS.
7.18 VAPOR BARRIER.
7.43 METAL FLASHING.
7.67 15" ACM PANEL TRIM AROUND PERIMETER OF FOURFOLD DOORS. COLOR: TBD.
7.68 15" ACM PANEL TRIM AROUND PERIMETER OF OVERHEAD DOORS. COLOR: TBD.
8.25 FOUR-FOLD DOOR WITH STEEL TUBE SUPPORTS AT JAMBS. REFER TO DOOR SCHEDULE. PEMB ENGINEER TO COORDINATE WITH PRODUCT SUBMITTAL REQUIREMENTS.
8.52
13.01 PEMB STRUCTURAL METAL BENT. REFER TO STRUCTURAL DRAWINGS FOR PERFORMANCE CRITERIA.
13.03 PEMB METAL GIRT. 8" TYPICAL.
13.05 PEMB EAVE STRUT.
13.08 PEMB PREFINISHED SOFFIT PANEL.
13.11 PEMB PREFINISHED FASCIA PROFILE WITH EXTENSION. COLOR TO MATCH ROOF PANEL.
13.14 PEMB PREFINISHED GUTTER WITH BRACKET.
13.21 PEMB VERTICAL WALL PANELS.
13.24 PEMB EXTERIOR HEAD TRIM.
13.26 PEMB JAMB TRIM.
13.37 PEMB STANDING SEAM METAL ROOFING SYSTEM. REFER TO SPECIFICATIONS.
13.38 PEMB SIMPLE SAVER INSULATION SYSTEM ON ROOF. R-30 R-VALUE FOR ROOF.
13.40 PEMB LINER PANEL FULL HEIGHT UP TO EAVE. FINISH IS WHITE.
13.48 PEMB SIMPLE SAVER BAG INSULATION. R-VALUE: 19.
23.14 MECHANICAL FLUE. REFER TO MECHANICAL DRAWINGS.
26.13 EXTERIOR WALL SCONCE. REFER TO ELECTRICAL DRAWINGS.
32.34 6 INCH DIAMETER STEEL PIPE BOLLARD, 48 INCHES TALL, CONCRETE FILLED WITH METAL DOME CAP. PAINT. REFER TO CIVIL DRAWINGS.

Seal

19 MAR 2026

DP3 ARCHITECTS

DP3 Architects, Ltd.
15 South Main Street, Suite 400
Greenville, SC 29601
864.232.8200
www.DP3architects.com

Project

NEWBERRY COUNTY
PUBLIC SAFETY
COMPLEX

Project Number	23232
Drawn By	JMS/LEB
Checked By	RHW/JMS
Date	19 MAR 2026

Revisions

A	09 OCT 2024	30% SET
B	16 JAN 2026	60% SET
C	18 FEB 2026	90% SET
D	12 MAR 2026	PERMIT SET

Drawing

WALL SECTIONS @ PEMB FIRE APP BAYS

A7.01

DRAWING NOTES

4.26	MANUFACTURED STONE VENEER IN GROUT BED WITH WALL TIES. INSTALL PER MANUFACTURER'S INSTRUCTIONS.
7.68	15" ACM PANEL TRIM AROUND PERIMETER OF OVERHEAD DOORS. COLOR: TBD.
8.25	FOUR-FOLD DOOR WITH STEEL TUBE SUPPORTS AT JAMBS. REFER TO DOOR SCHEDULE. PEMB ENGINEER TO COORDINATE WITH PRODUCT SUBMITTAL REQUIREMENTS.
8.52	
10.19	BUILT UP CANOPY WITH STANDING SEAM METAL ROOF.
13.03	PEMB METAL GIRT. 8" TYPICAL.
13.08	PEMB PREFINISHED SOFFIT PANEL.
13.11	PEMB PREFINISHED FASCIA PROFILE WITH EXTENSION. COLOR TO MATCH ROOF PANEL.
13.14	PEMB PREFINISHED GUTTER WITH BRACKET.
13.21	PEMB VERTICAL WALL PANELS.
13.26	PEMB JAMB TRIM.
13.37	PEMB STANDING SEAM METAL ROOFING SYSTEM. REFER TO SPECIFICATIONS.
13.39	PEMB BAG & SAG INSULATION. R-19 R-VALUE FOR WALLS.
13.40	PEMB LINER PANEL FULL HEIGHT UP TO EAVE. FINISH IS WHITE.
13.41	PEMB STEEL BENT WITH STRAIGHT COLUMNS.
32.05	HORIZONTAL WOOD PLANK FENCING. REFER TO CIVIL DRAWINGS FOR DESIGN.
32.34	6 INCH DIAMETER STEEL PIPE BOLLARD, 48 INCHES TALL, CONCRETE FILLED WITH METAL DOME CAP. PAINT. REFER TO CIVIL DRAWINGS.

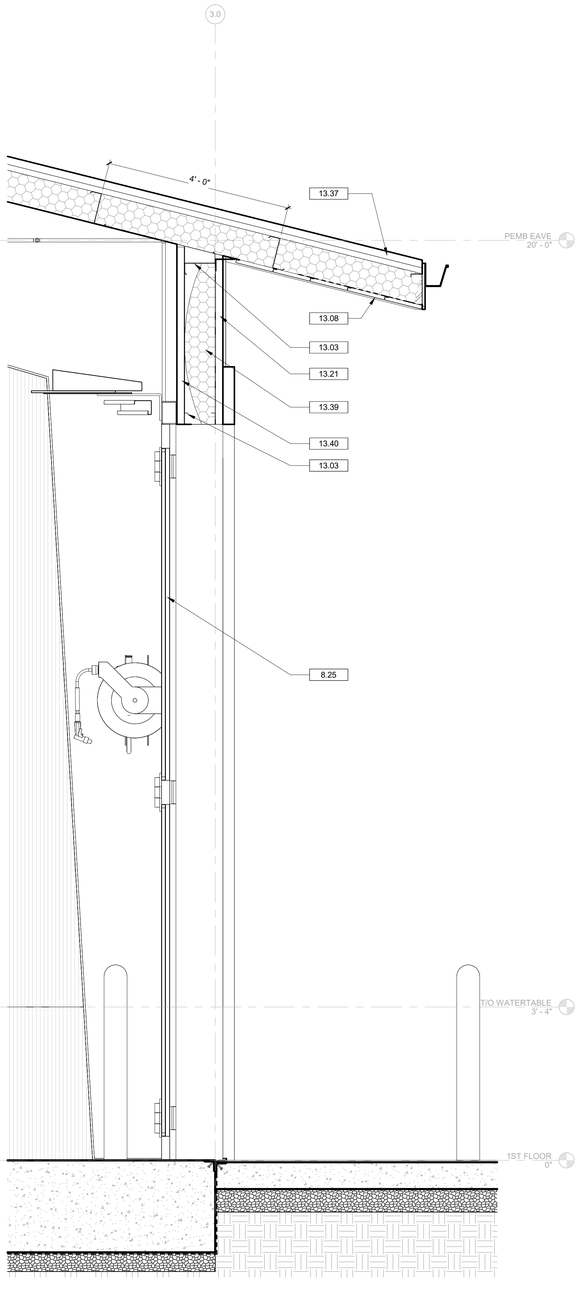

1 A7.02 WALL SECTION - PEMB @ RESCUE APP BAY FOUR-FOLD DOOR SOUTH
3/4" = 1'-0"

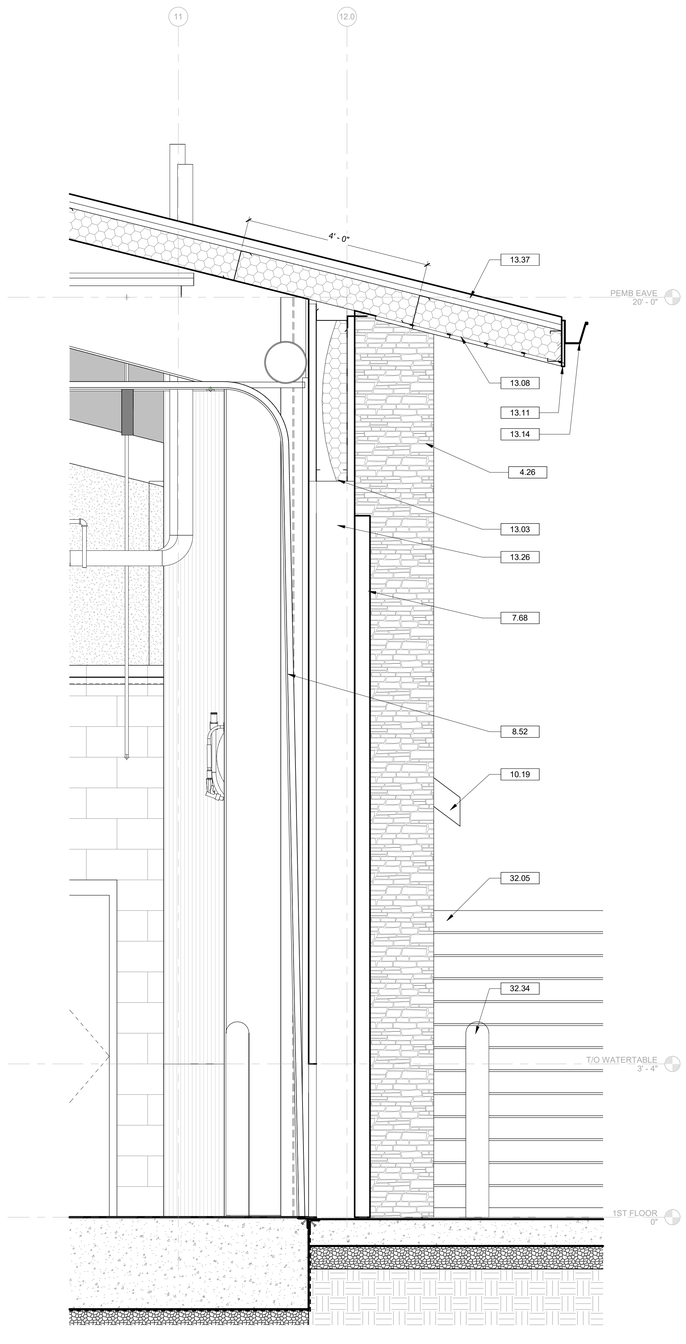

2 A7.02 WALL SECTION - PEMB @ RESCUE APP BAY OVERHEAD DOOR NORTH
3/4" = 1'-0"

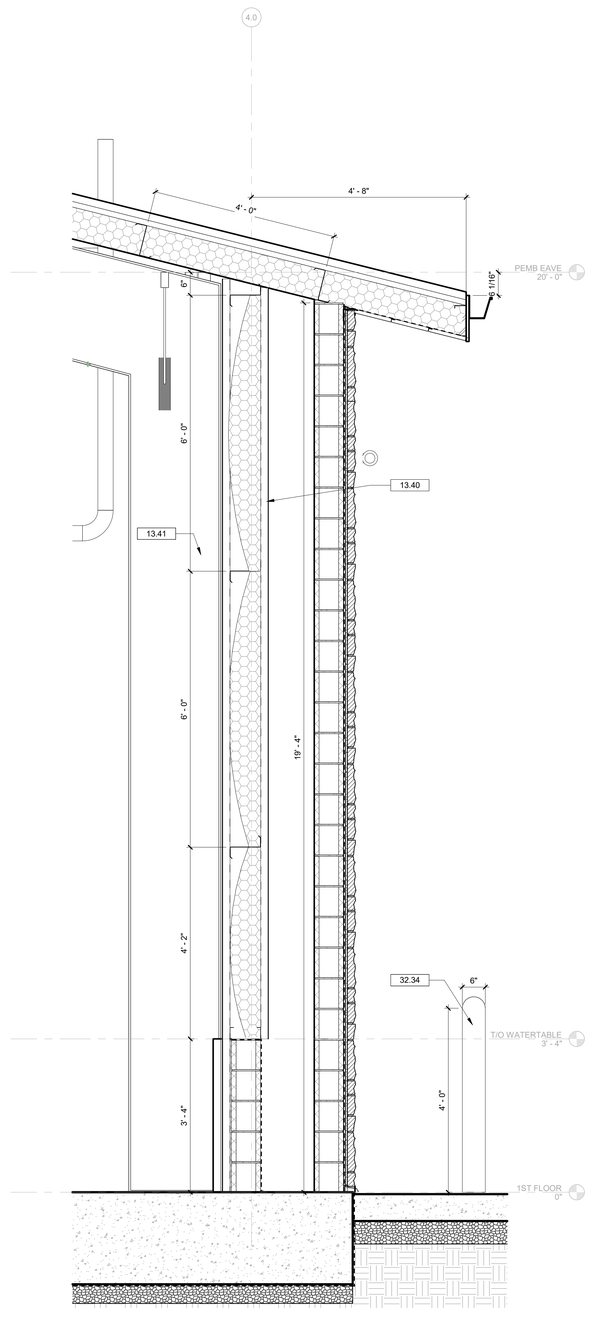

3 A7.02 WALL SECTION - PEMB @ RESCUE APP BAY STONE PILASTER
3/4" = 1'-0"

Copyright : These Drawings are the property of DP3 Architects, Ltd., and reuse on any other project without written permission will result in legal action.

Seal

STATE OF SOUTH CAROLINA
DP3 ARCHITECTS LTD.
GREENVILLE, SC
B - 84017
REGISTERED ARCHITECT

STATE OF SOUTH CAROLINA
MICHAEL THOMAS PRY
GREENVILLE, SC
04570
REGISTERED ARCHITECT

19 MAR 2026

DP3 ARCHITECTS

DP3 Architects, Ltd.
15 South Main Street, Suite 400
Greenville, SC 29601
864.232.8200
www.DP3architects.com

Project

COUNTY OF NEWBERRY
1785
SOUTH CAROLINA

NEWBERRY COUNTY
PUBLIC SAFETY
COMPLEX

Project Number	23232
Drawn By	JMS/LEB
Checked By	RHW/JMS
Date	19 MAR 2026

Revisions

A	09 OCT 2024	30% SET
B	16 JAN 2026	60% SET
C	18 FEB 2026	90% SET
D	12 MAR 2026	PERMIT SET

Drawing

WALL SECTIONS @
PEMB RESCUE
APP BAYS

A7.02

Copyright : These Drawings are the property of DP3 Architects, Ltd., and reuse on any other project without written permission will result in legal action.

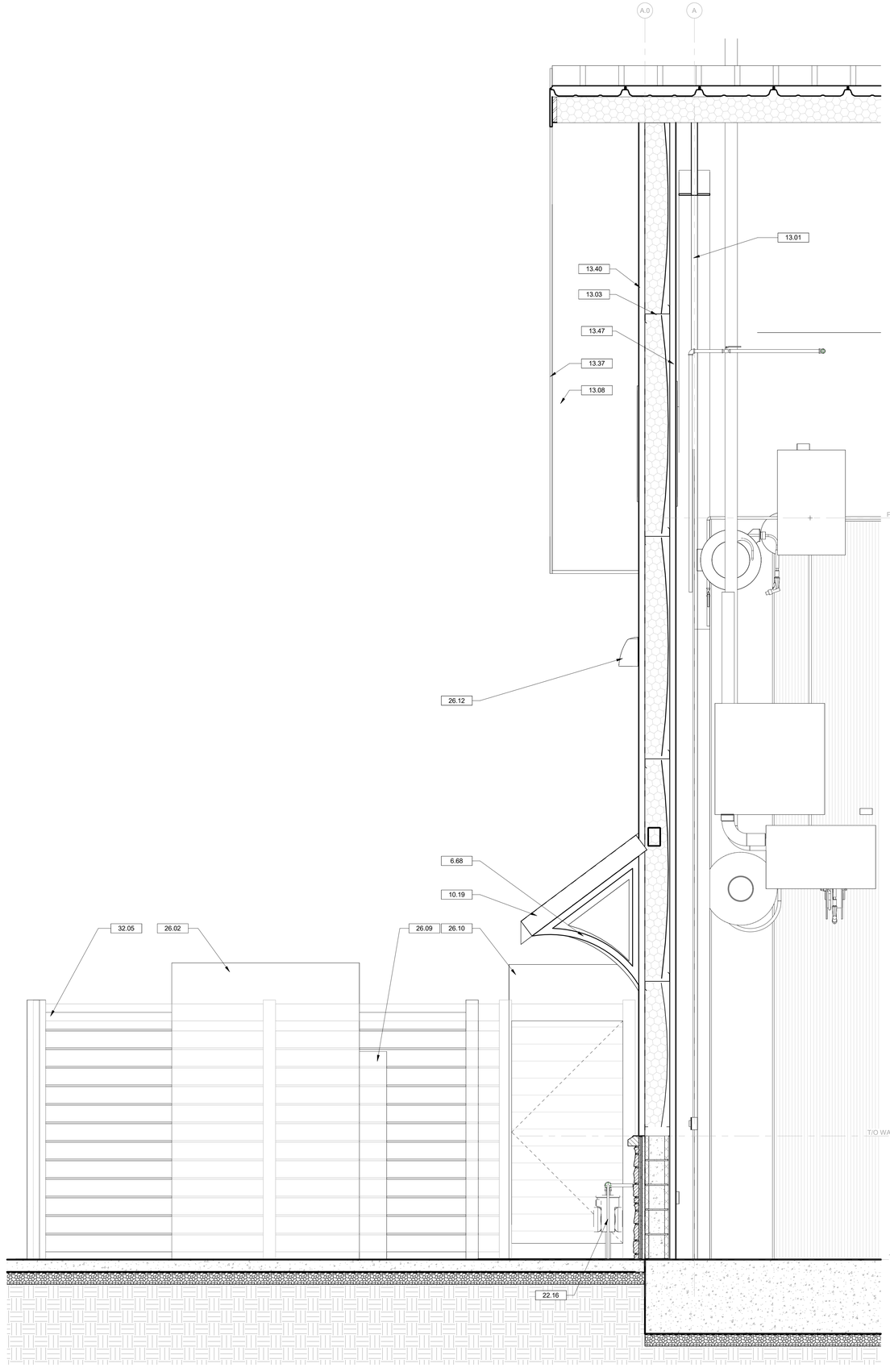

1 A7.03 WALL SECTION - PEMB @ FIRE APP BAY WALL & UTILITY YARD FENCE
3/4" = 1'-0"

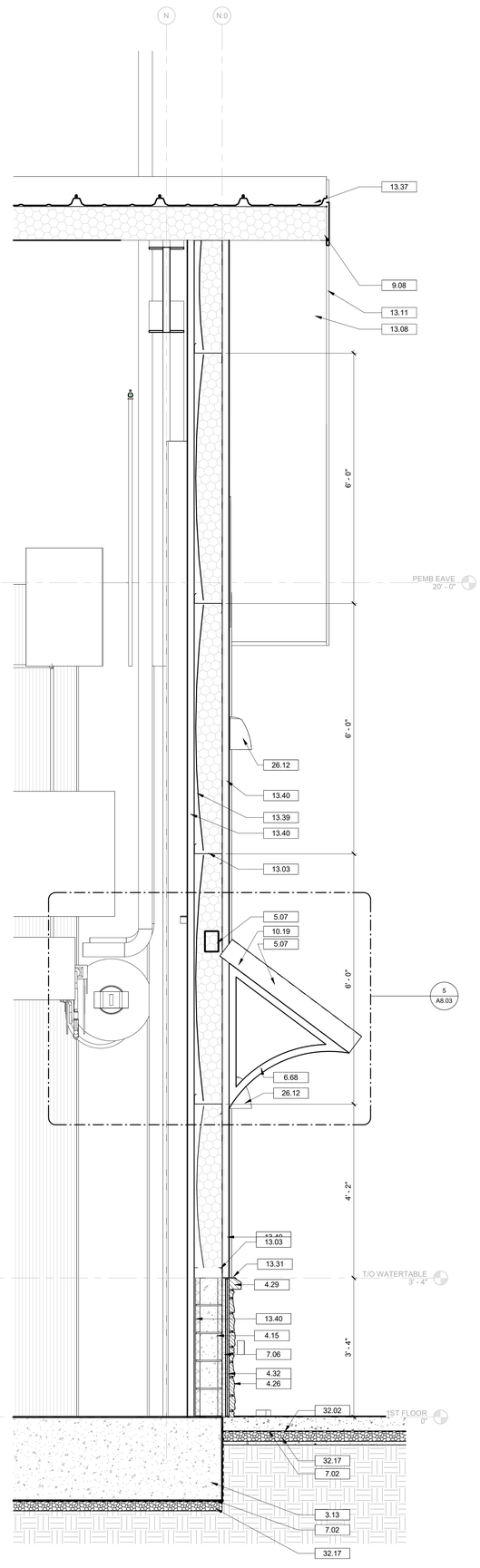

2 A7.03 WALL SECTION - PEMB @ RESCUE APP BAY AND AWNING
3/4" = 1'-0"

DRAWING NOTES

3.13 REINFORCED CONCRETE SLAB ON GRADE. REFER TO STRUCTURAL DRAWINGS.
4.15 EXTERIOR 8 INCH X 8 INCH X 16 INCH CONCRETE MASONRY UNIT. REFER TO STRUCTURAL DRAWINGS FOR REINFORCEMENT. REFER TO WALL TYPE SCHEDULE.
4.26 MANUFACTURED STONE VENEER IN GROUT BED WITH WALL TIES. INSTALL PER MANUFACTURER'S INSTRUCTIONS.
4.29 CAST STONE SILL.
4.32 MASONRY MORTAR. REFER TO STRUCTURAL DRAWINGS.
5.07 STRUCTURAL FRAMING. REFER TO STRUCTURAL DRAWINGS.
6.68 GLULAM CANOPY BRACKET WRAPPED IN PVC.
7.02 WATERPROOFING SYSTEM. INSTALL PER MANUFACTURER'S INSTRUCTIONS.
7.06 RIGID INSULATION. REFER TO WALL TYPE SCHEDULE FOR R VALUE.
9.08 METAL FRAMING RUNNER.
10.19 BUILT UP CANOPY WITH STANDING SEAM METAL ROOF.
13.01 PEMB STRUCTURAL METAL BENT. REFER TO STRUCTURAL DRAWINGS FOR PERFORMANCE CRITERIA.
13.03 PEMB METAL GIRT. 8" TYPICAL.
13.08 PEMB PREFINISHED SOFFIT PANEL.
13.11 PEMB PREFINISHED FASCIA PROFILE WITH EXTENSION. COLOR TO MATCH ROOF PANEL.
13.31 PEMB PREFINISHED BASE TRIM.
13.37 PEMB STANDING SEAM METAL ROOFING SYSTEM. REFER TO SPECIFICATIONS.
13.39 PEMB BAG & SAG INSULATION. R-19 R-VALUE FOR WALLS.
13.40 PEMB LINER PANEL FULL HEIGHT UP TO EAVE. FINISH IS WHITE.
13.47 PEMB LINER PANEL. REFER TO SPECIFICATIONS.
22.16 UTILITY METER. REFER TO PLUMBING DRAWINGS.
26.02 GENERATOR. REFER TO ELECTRICAL DRAWINGS.
26.09 TRANSFORMER. REFER TO ELECTRICAL DRAWINGS.
26.10 TRANSFER SWITCH. REFER TO ELECTRICAL DRAWINGS.
26.12 WALL PACK. REFER TO ELECTRICAL DRAWINGS.
32.02 CONCRETE PAVING. REFER TO CIVIL DRAWINGS.
32.05 HORIZONTAL WOOD PLANK FENCING. REFER TO CIVIL DRAWINGS FOR DESIGN.
32.17 COMPACTED FILL. REFER TO STRUCTURAL DRAWINGS.

Seal

19 MAR 2026

DP3 ARCHITECTS

DP3 Architects, Ltd.
15 South Main Street, Suite 400
Greenville, SC 29601
864.232.8200
www.DP3architects.com

Project

NEWBERRY COUNTY
PUBLIC SAFETY
COMPLEX

Project Number	23232
Drawn By	JMS/LEB
Checked By	RHW/JMS
Date	19 MAR 2026

Revisions

A	09 OCT 2024	30% SET
B	16 JAN 2026	60% SET
C	18 FEB 2026	90% SET
D	12 MAR 2026	PERMIT SET

Drawing

WALL SECTIONS @
PEMB SIDE WALLS

A7.03

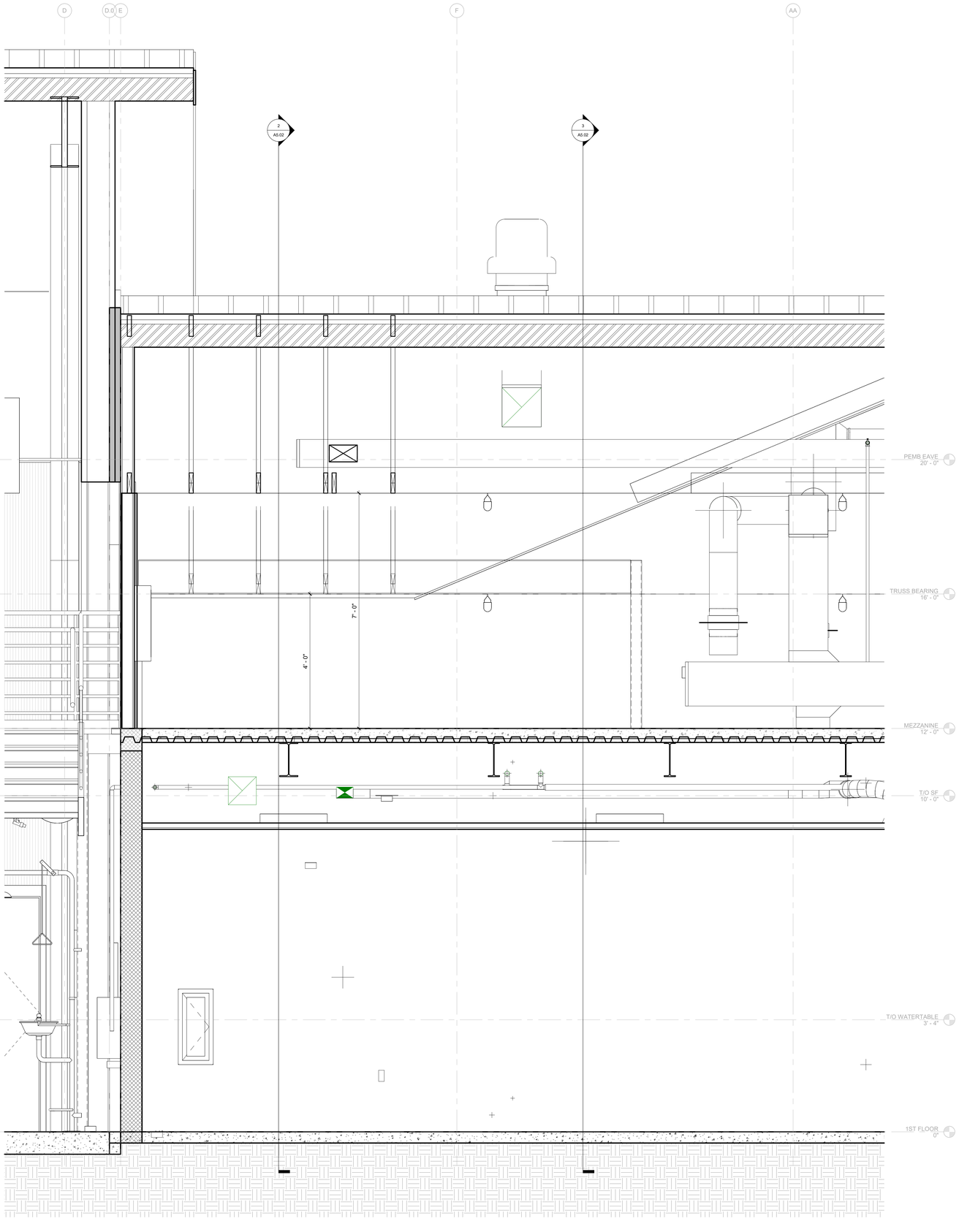

1 A7.04 WALL SECTION - PEMB TO WOOD @ FIRE MEZZANINE EXP JOINT
3/4" = 1'-0"

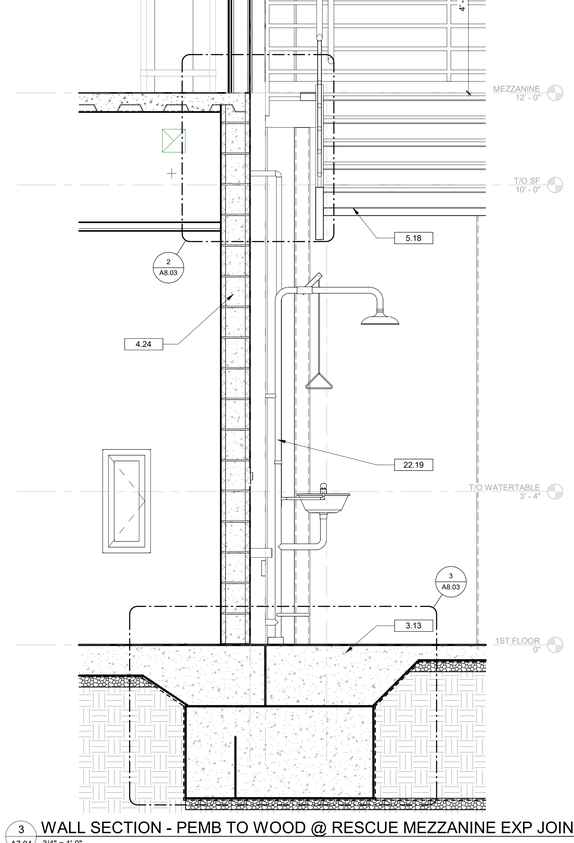

3 A7.04 WALL SECTION - PEMB TO WOOD @ RESCUE MEZZANINE EXP JOINT
3/4" = 1'-0"

DRAWING NOTES

3.13 REINFORCED CONCRETE SLAB ON GRADE. REFER TO STRUCTURAL DRAWINGS.
4.24 8 INCH X 8 INCH X 16 INCH CONCRETE MASONRY UNIT, RUNNING BOND.
5.18 12 INCH METAL STRINGER CHANNEL ATTACHED TO STEEL SUPPORT FRAMING AND METAL PAN STAIRS AS REQUIRED. PAINT. REFER TO STRUCTURAL.
7.66 EXPANSION JOINT COVER ASSEMBLY, 4".
13.03 PEMB METAL GIRT. 8" TYPICAL.
13.06 PEMB COLUMN.
13.37 PEMB STANDING SEAM METAL ROOFING SYSTEM. REFER TO SPECIFICATIONS.
13.38 PEMB SIMPLE SAVER INSULATION SYSTEM ON ROOF. R-30 R-VALUE FOR ROOF.
13.41 PEMB STEEL BENT WITH STRAIGHT COLUMNS.
22.19 EMERGENCY EYE WASH & SHOWER STATION. REFER TO PLUMBING DRAWINGS.
23.07 VEHICLE EXHAUST SYSTEM SUSPENDED FROM STRUCTURE. REFER TO MECHANICAL DRAWINGS.
23.20 HVAC DUCTWORK. REFER TO HVAC DRAWINGS.

Seal

STATE OF SOUTH CAROLINA
DP3 ARCHITECTS LTD.
GREENVILLE, SC
B - 84017
REGISTERED ARCHITECT

STATE OF SOUTH CAROLINA
MICHAEL THOMAS SPIN
GREENVILLE, SC
04570
REGISTERED ARCHITECT

19 MAR 2026

DP3 ARCHITECTS

DP3 Architects, Ltd.
15 South Main Street, Suite 400
Greenville, SC 29601
864.232.8200
www.DP3architects.com

Project

COUNTY OF NEWBERRY 1785 SOUTH CAROLINA

NEWBERRY COUNTY
PUBLIC SAFETY COMPLEX

Project Number	23232
Drawn By	JMS/LEB
Checked By	RHW/JMS
Date	19 MAR 2026

Revisions

A	09 OCT 2024	30% SET
B	16 JAN 2026	60% SET
C	18 FEB 2026	90% SET
D	12 MAR 2026	PERMIT SET

Drawing

WALL SECTIONS @ PEMB TO WOOD EXPANSION JOINTS

A7.04

Copyright: These Drawings are the property of DP3 Architects, Ltd., and reuse on any other project without written permission will result in legal action.

Copyright : These Drawings are the property of DP3 Architects, Ltd., and reuse on any other project without written permission will result in legal action.

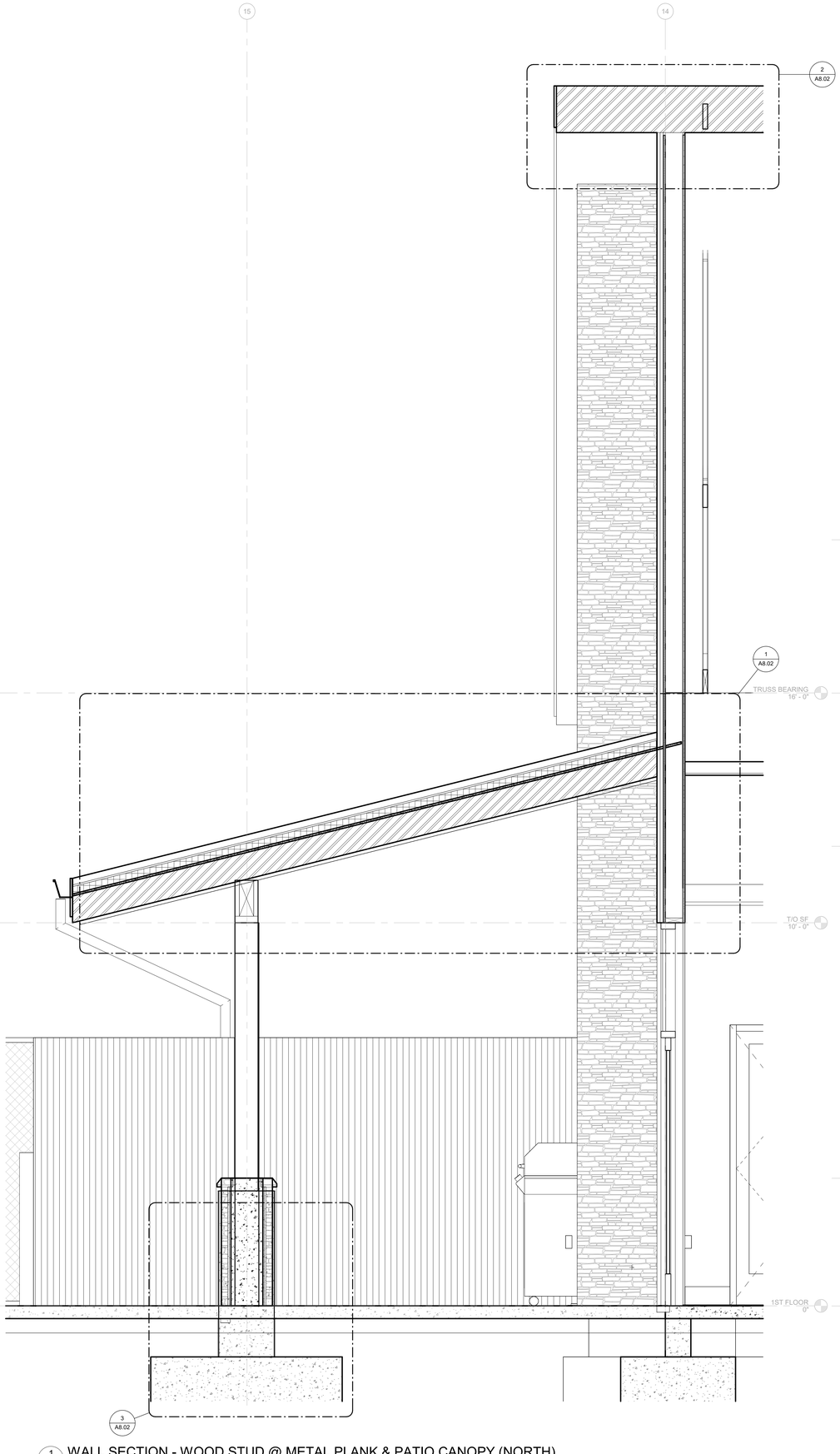

1 A7.05 WALL SECTION - WOOD STUD @ METAL PLANK & PATIO CANOPY (NORTH)
3/4" = 1'-0"

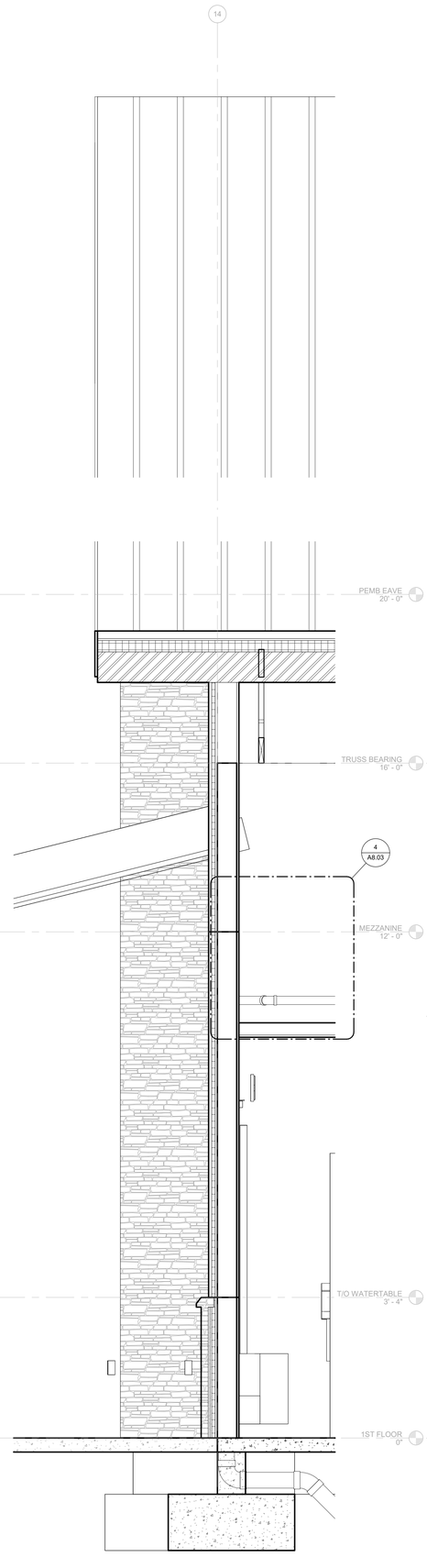

3 A7.05 WALL SECTION - WOOD STUD @ METAL PLANK & STONE
3/4" = 1'-0"

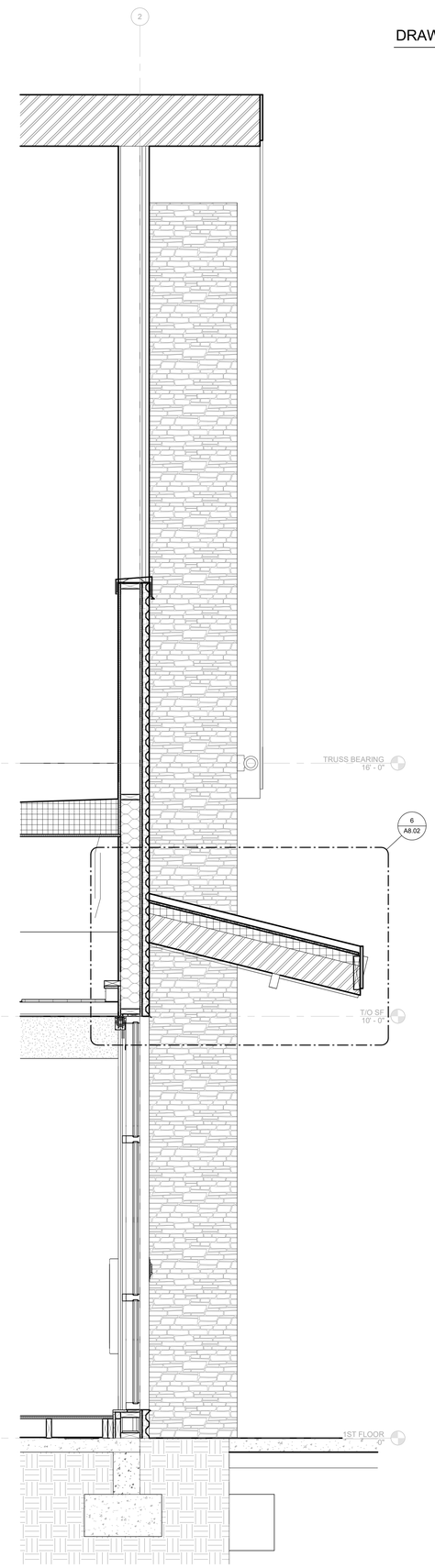

2 A7.05 WALL SECTION - WOOD STUD @ METAL PLANK & ENTRY CANOPY (SOUTH)
3/4" = 1'-0"

DRAWING NOTES

Seal

19 MAR 2026

DP3 ARCHITECTS

DP3 Architects, Ltd.
15 South Main Street, Suite 400
Greenville, SC 29601
864.232.8200
www.DP3architects.com

Project

NEWBERRY COUNTY
PUBLIC SAFETY
COMPLEX

Project Number	23232
Drawn By	JMS/LEB
Checked By	RHW/JMS
Date	19 MAR 2026

Revisions

A	09 OCT 2024	30% SET
B	16 JAN 2026	60% SET
C	18 FEB 2026	90% SET
D	12 MAR 2026	PERMIT SET

Drawing

WALL SECTIONS @
WOOD STUD
WALLS

A7.05

Copyright : These Drawings are the property of DP3 Architects, Ltd., and reuse on any other project without written permission will result in legal action.

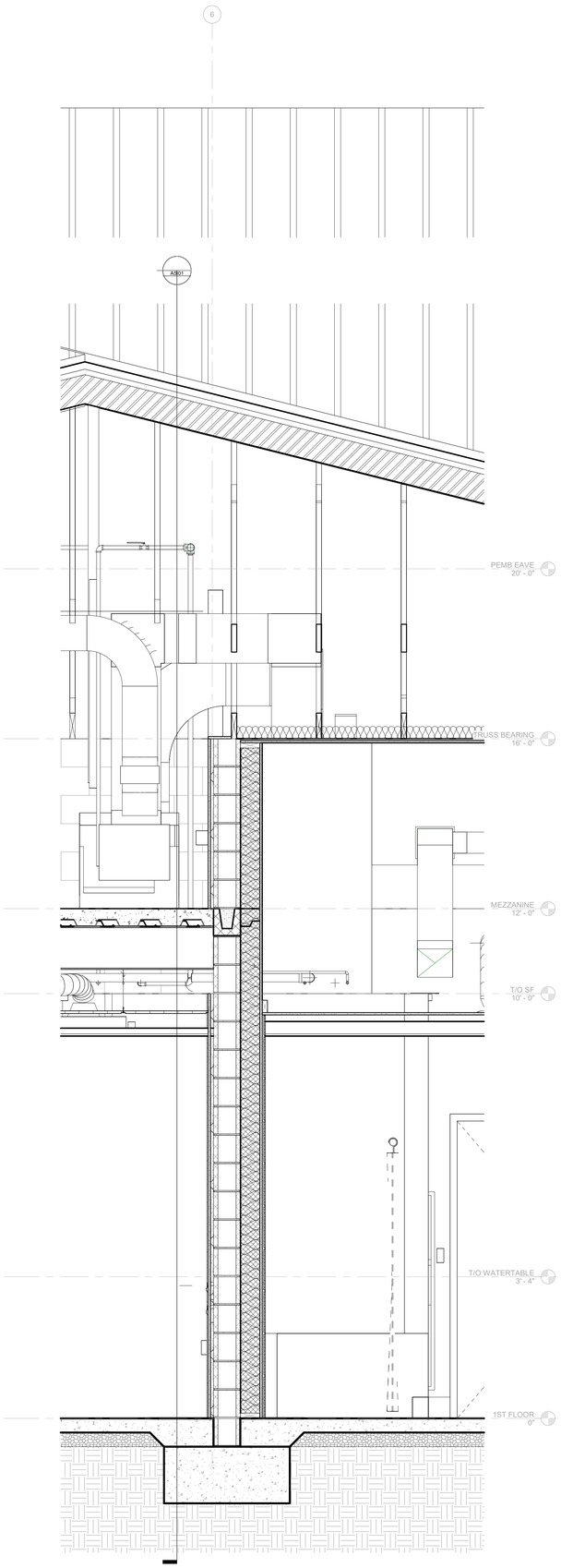

1 A7.06 WALL SECTION - WOOD STUD & CMU @ 1-HR FIRE RATED WALL TO CEILING
3/4" = 1'-0"

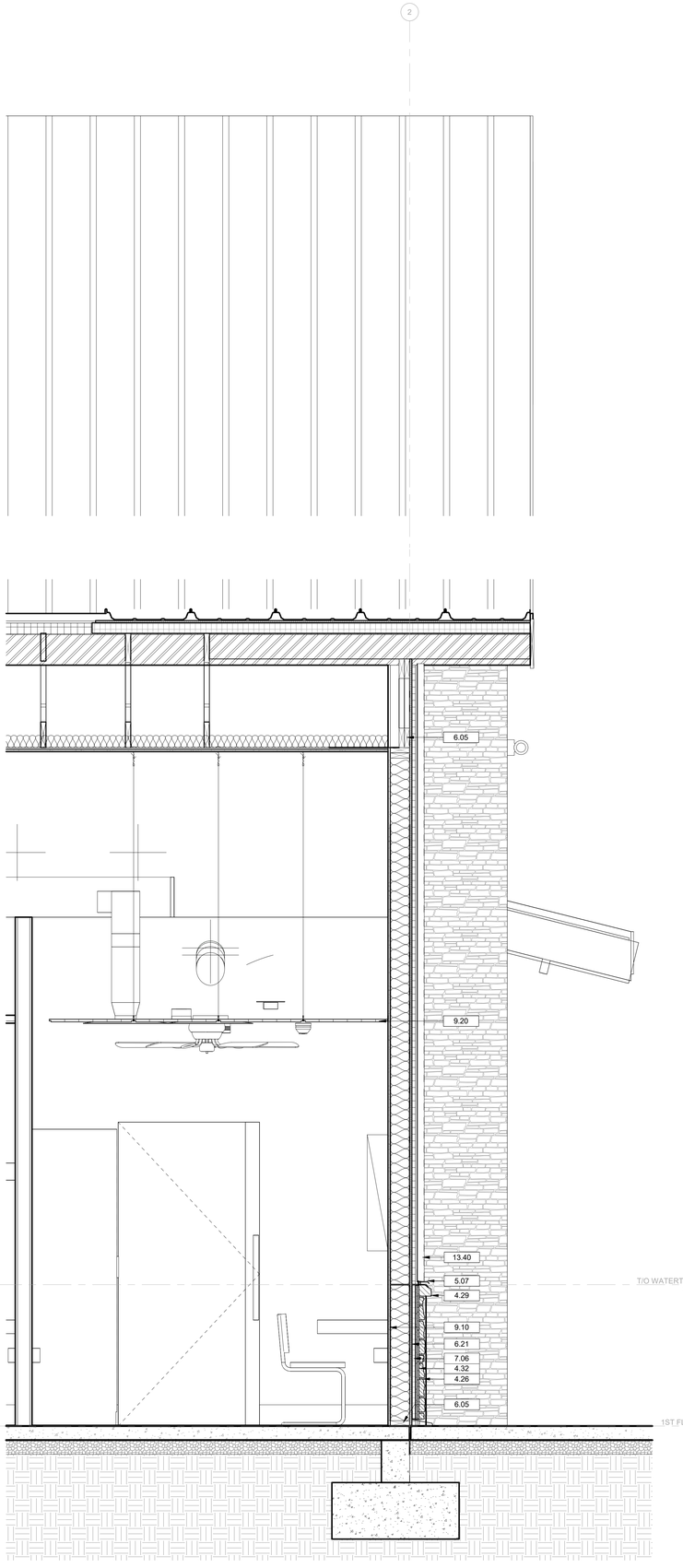

2 A7.06 WALL SECTION - WOOD STUD @ METAL PLANK & STONE (NORTH)
3/4" = 1'-0"

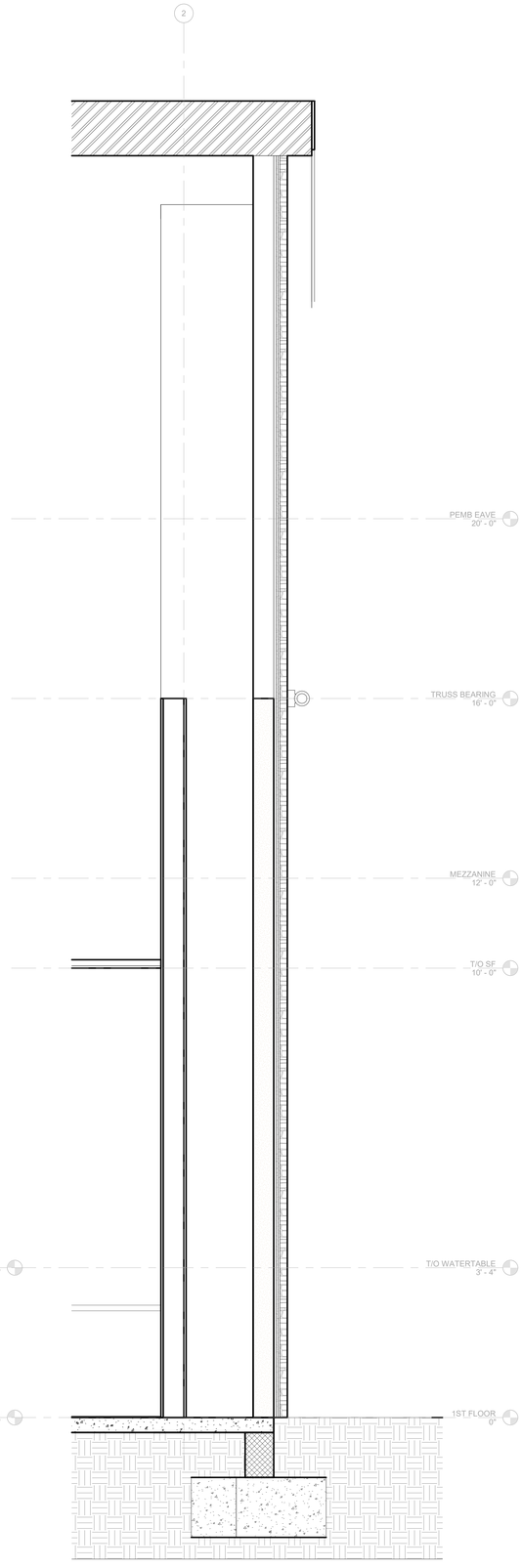

3 A7.06 WALL SECTION - WOOD STUD @ STONE PILASTER
3/4" = 1'-0"

DRAWING NOTES

4.26 MANUFACTURED STONE VENEER IN GROUT BED WITH WALL TIES. INSTALL PER MANUFACTURER'S INSTRUCTIONS.
4.29 CAST STONE SILL.
4.32 MASONRY MORTAR. REFER TO STRUCTURAL DRAWINGS.
5.07 STRUCTURAL FRAMING. REFER TO STRUCTURAL DRAWINGS.
6.05 2 x 6 WOOD FRAMING AT 16 INCHES ON CENTER. UNLESS NOTED OTHERWISE.
6.21 5/8 INCH PLYWOOD.
7.06 RIGID INSULATION. REFER TO WALL TYPE SCHEDULE FOR R VALUE.
9.10 5/8 INCH GYPSUM WALL BOARD.
9.20 ACOUSTICAL CEILING TILE. REFER TO FINISH SCHEDULE.
13.40 PEMB LINER PANEL FULL HEIGHT UP TO EAVE. FINISH IS WHITE.

Seal

STATE OF SOUTH CAROLINA
DP3 ARCHITECTS LTD.
GREENVILLE, SC
B - 84017
REGISTERED ARCHITECT

STATE OF SOUTH CAROLINA
MICHAEL THOMAS
JOHN
GREENVILLE, SC
04570
REGISTERED ARCHITECT

19 MAR 2026

DP3 ARCHITECTS

DP3 Architects, Ltd.
15 South Main Street, Suite 400
Greenville, SC 29601
864.232.8200
www.DP3architects.com

Project

NEWBERRY COUNTY
PUBLIC SAFETY
COMPLEX

Project Number	23232
Drawn By	JMS/LEB
Checked By	RHW/JMS
Date	19 MAR 2026

Revisions

A	09 OCT 2024	30% SET
B	16 JAN 2026	60% SET
C	18 FEB 2026	90% SET
D	12 MAR 2026	PERMIT SET

Drawing

WALL SECTIONS @ WOOD STUD WALLS

A7.06

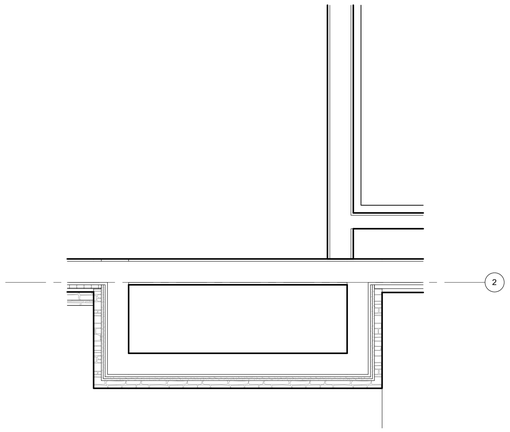

8 A8.01 PLAN DETAIL - SOUTH ENTRANCE
3/4" = 1'-0"

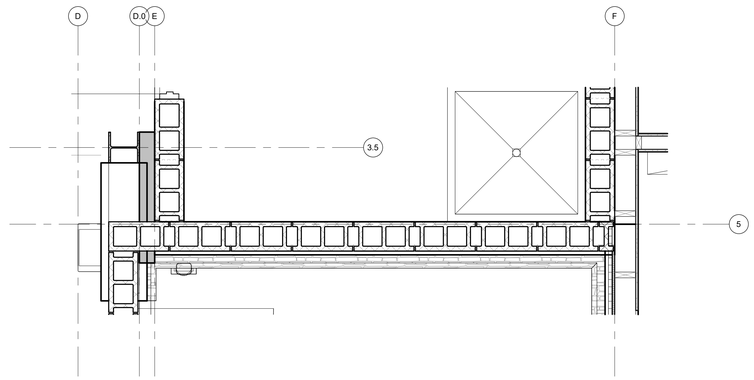

3 A8.01 PLAN DETAIL - JAN 134, BUNK 141, FIRE APP BAY
3/4" = 1'-0"

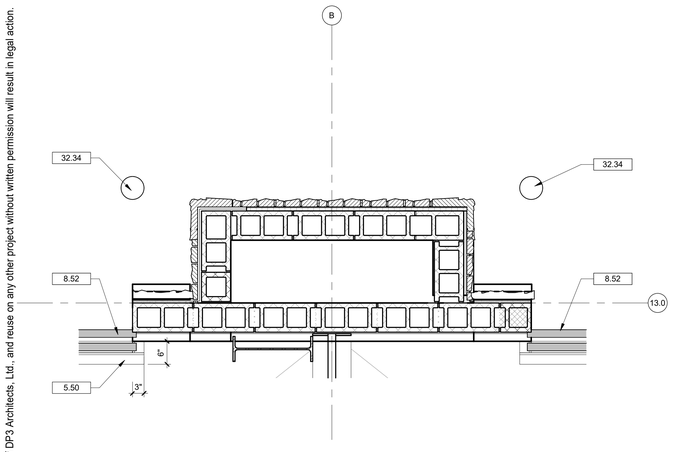

5 A8.01 PLAN DETAIL - NORTH PILASTER LOW
3/4" = 1'-0"

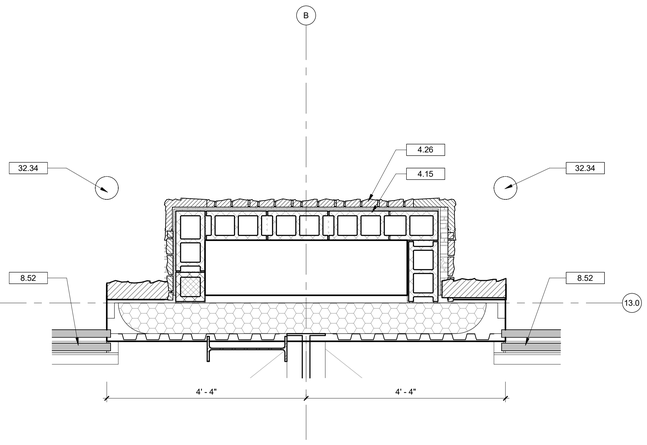

4 A8.01 PLAN DETAIL - NORTH PILASTER HIGH
3/4" = 1'-0"

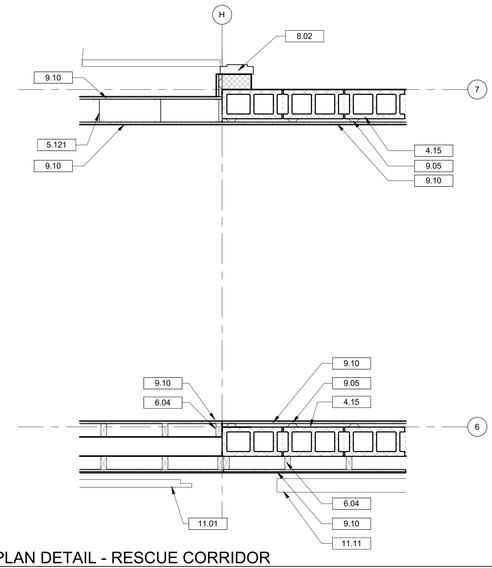

2 A8.01 PLAN DETAIL - RESCUE CORRIDOR
3/4" = 1'-0"

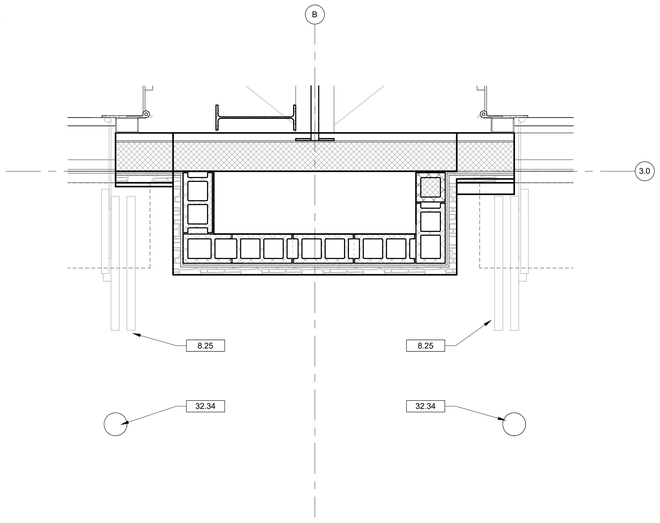

7 A8.01 PLAN DETAIL - SOUTH PILASTER LOW
3/4" = 1'-0"

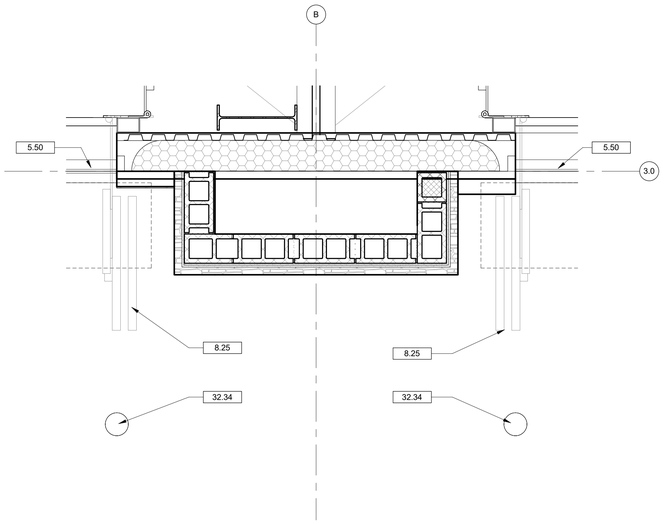

6 A8.01 PLAN DETAIL - SOUTH PILASTER HIGH
3/4" = 1'-0"

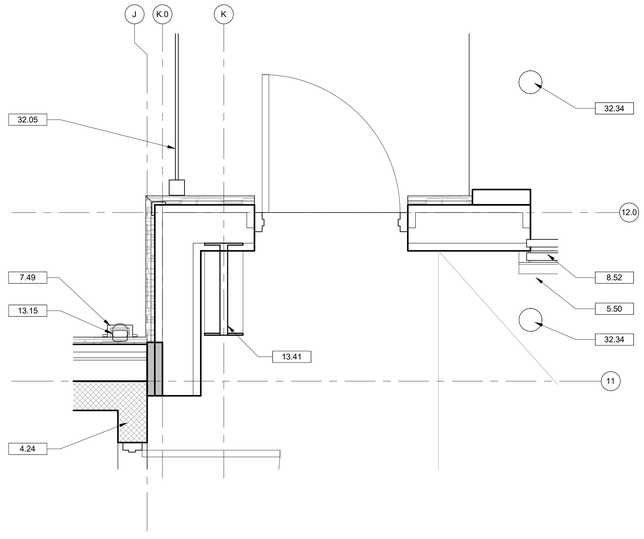

1 A8.01 PLAN DETAIL - RESCUE APPBAY NORTH EXIT
3/4" = 1'-0"

DRAWING NOTES

4.15	EXTERIOR 8 INCH X 8 INCH X 16 INCH CONCRETE MASONRY UNIT. REFER TO STRUCTURAL DRAWINGS FOR REINFORCEMENT. REFER TO WALL TYPE SCHEDULE.
4.24	8 INCH X 8 INCH X 16 INCH CONCRETE MASONRY UNIT, RUNNING BOND.
4.26	MANUFACTURED STONE VENEER IN GROUT BED WITH WALL TIES. INSTALL PER MANUFACTURER'S INSTRUCTIONS.
5.50	STEEL ANGLE THRESHOLD. (2) L3X3X1/2 STEEL ANGLES WELDED BACK TO BACK TO EACH OTHER AND OFFSET 1/2" IN DEPTH. REFER TO BUILDING DETAILS. TYPICAL AT ALL OVERHEAD AND FOUR-FOLD DOOR LOCATIONS.
5.121	
6.04	2 x 4 WOOD FRAMING AT 16 INCHES ON CENTER. UNLESS NOTED OTHERWISE.
7.49	PREFINISHED METAL DOWNSPOUT BOOT. TIE INTO STORM DRAIN. REFER TO PLUMBING AND CIVIL DRAWINGS.
8.02	DOOR. REFER TO DOOR SCHEDULE.
8.25	FOUR-FOLD DOOR WITH STEEL TUBE SUPPORTS AT JAMBS. REFER TO DOOR SCHEDULE. PEMB ENGINEER TO COORDINATE WITH PRODUCT SUBMITTAL REQUIREMENTS.
8.52	
9.05	7/8 INCH METAL FURRING.
9.10	5/8 INCH GYPSUM WALL BOARD.
11.01	WALL MOUNTED TV. PROVIDED BY OWNER AND INSTALLED BY CONTRACTOR. PROVIDE BLOCKING AS NEEDED.
11.11	GLASS WHITEBOARD MOUNTED TO WALL. 5FT X 8FT. PROVIDE BLOCKING IN WALL.
13.15	PEMB PREFINISHED DOWNSPOUT AND BRACKETS. TIE TO STORM DRAIN SYSTEM. REFER TO CIVIL DRAWINGS FOR CONTINUATION.
13.41	PEMB STEEL BENT WITH STRAIGHT COLUMNS.
32.05	HORIZONTAL WOOD PLANK FENCING. REFER TO CIVIL DRAWINGS FOR DESIGN.
32.34	6 INCH DIAMETER STEEL PIPE BOLLARD, 48 INCHES TALL. CONCRETE FILLED WITH METAL DOME CAP. PAINT. REFER TO CIVIL DRAWINGS.

Seal

STATE OF SOUTH CAROLINA
DP3 ARCHITECTS LTD.
GREENVILLE, SC
B - 84017
REGISTERED ARCHITECT

STATE OF SOUTH CAROLINA
MICHAEL THOMAS SIMON
GREENVILLE, SC
04570
REGISTERED ARCHITECT

19 MAR 2026

DP3 ARCHITECTS

DP3 Architects, Ltd.
15 South Main Street, Suite 400
Greenville, SC 29601
864.232.8200
www.DP3architects.com

Project

NEWBERRY COUNTY
PUBLIC SAFETY
COMPLEX

Project Number	23232
Drawn By	JMS/LEB
Checked By	RHW/JMS
Date	19 MAR 2026

Revisions

A	09 OCT 2024	30% SET
B	16 JAN 2026	60% SET
C	18 FEB 2026	90% SET
D	12 MAR 2026	PERMIT SET

Drawing

PLAN DETAILS

A8.01

Copyright : These Drawings are the property of DP3 Architects, Ltd., and reuse on any other project without written permission will result in legal action.

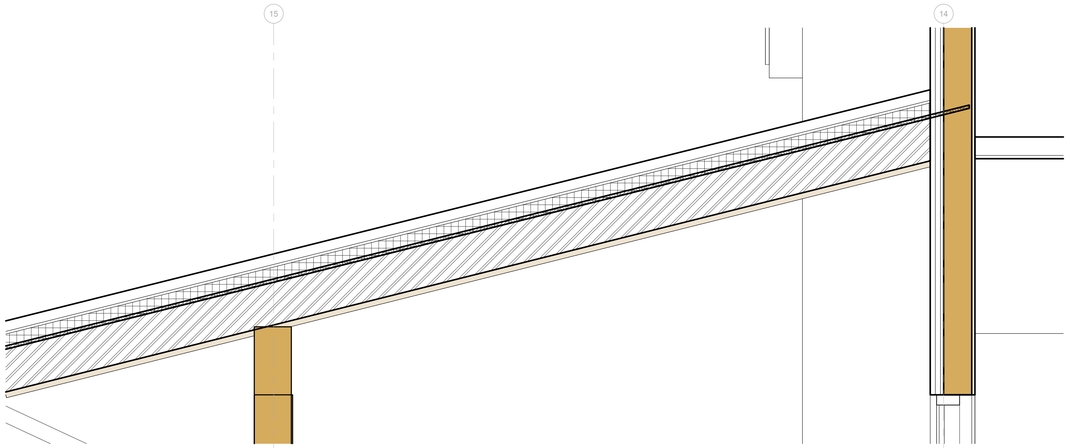

1 SECTION DETAIL
A8.02 1" = 1'-0"

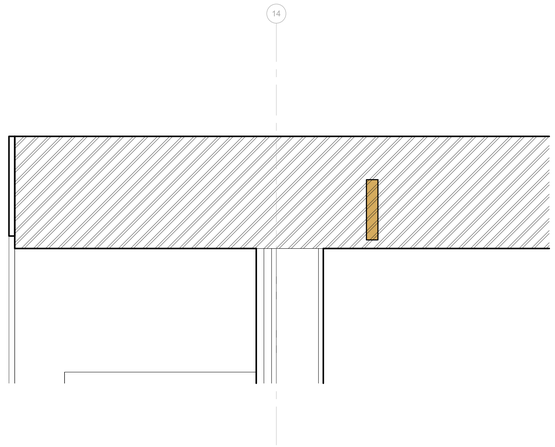

2 SECTION DETAIL
A8.02 1 1/2" = 1'-0"

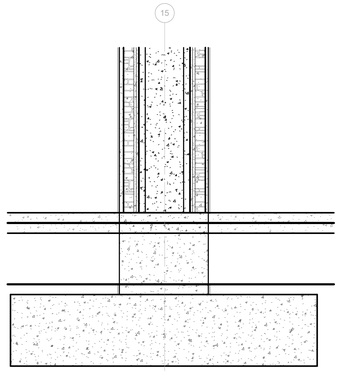

3 SECTION DETAIL
A8.02 1" = 1'-0"

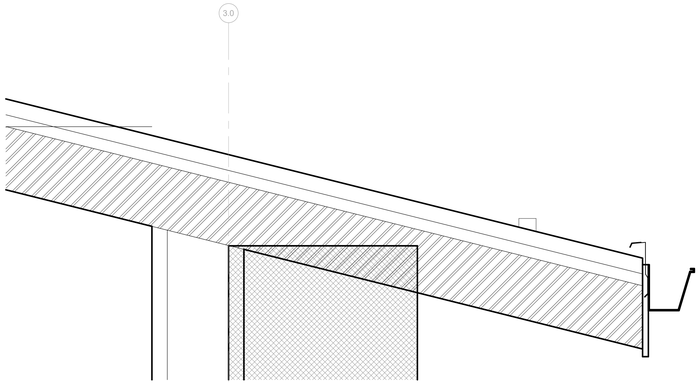

4 SECTION DETAIL
A8.02 1 1/2" = 1'-0"

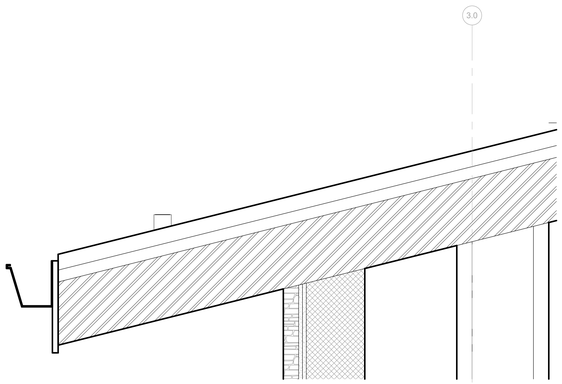

5 SECTION DETAIL
A8.02 1 1/2" = 1'-0"

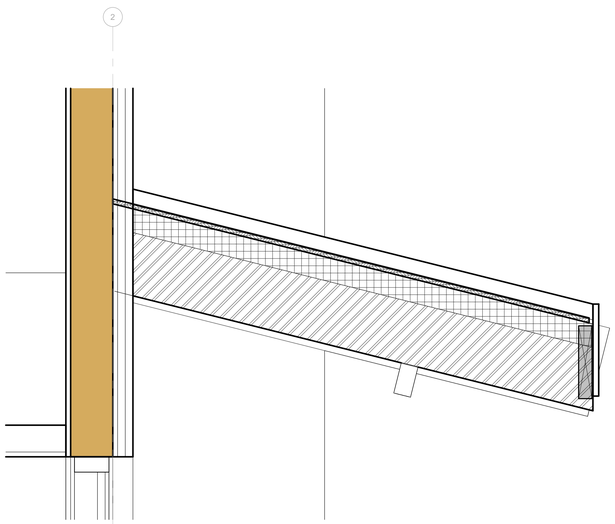

6 SECTION DETAIL
A8.02 1 1/2" = 1'-0"

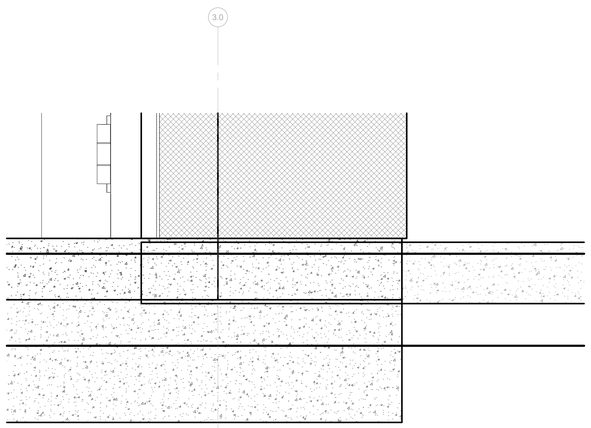

7 SECTION DETAIL
A8.02 1 1/2" = 1'-0"

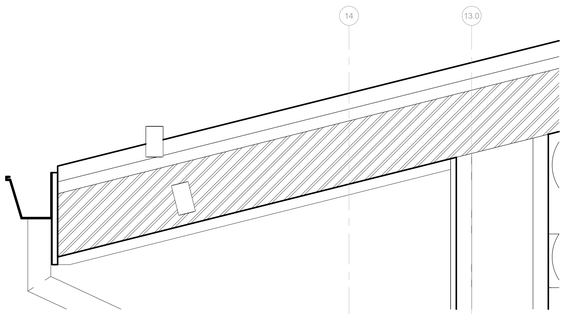

8 SECTION DETAIL
A8.02 1 1/2" = 1'-0"

DRAWING NOTES

Seal

19 MAR 2026

DP3 ARCHITECTS

DP3 Architects, Ltd.
15 South Main Street, Suite 400
Greenville, SC 29601
864.232.8200
www.DP3architects.com

Project

NEWBERRY COUNTY PUBLIC SAFETY COMPLEX

Project Number	23232
Drawn By	JMS/LEB
Checked By	RHW/JMS
Date	19 MAR 2026

Revisions

A	09 OCT 2024	30% SET
B	16 JAN 2026	60% SET
C	18 FEB 2026	90% SET
D	12 MAR 2026	PERMIT SET

Drawing

SECTION DETAILS

A8.02

Copyright : These Drawings are the property of DP3 Architects, Ltd., and reuse on any other project without written permission will result in legal action.

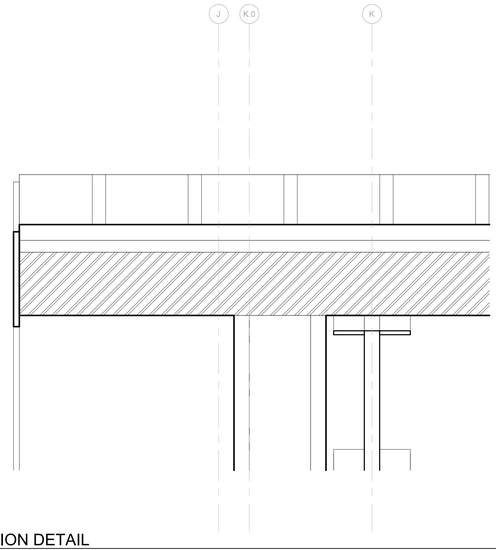

1 SECTION DETAIL
A8.03 1 1/2" = 1'-0"

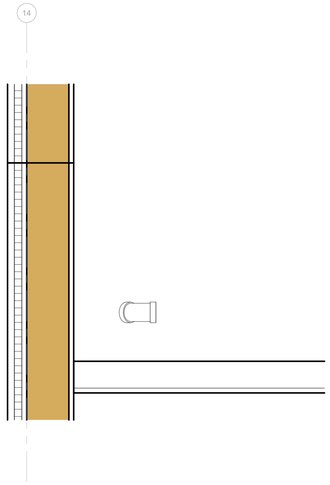

4 SECTION DETAIL
A8.03 1 1/2" = 1'-0"

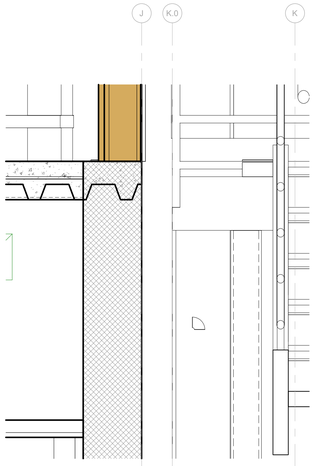

2 SECTION DETAIL
A8.03 1 1/2" = 1'-0"

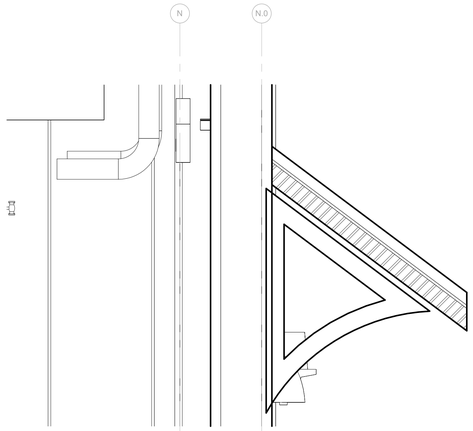

5 SECTION DETAIL
A8.03 1" = 1'-0"

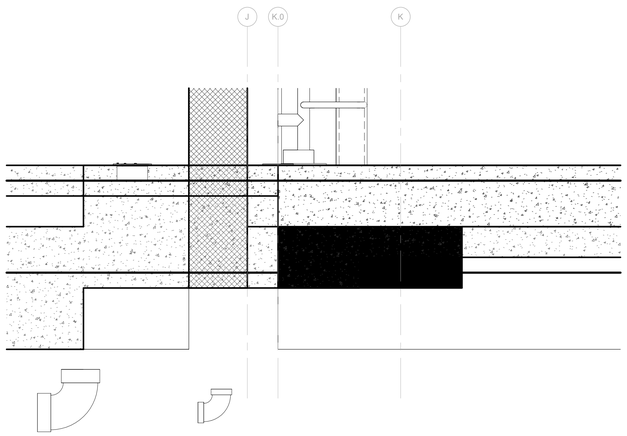

3 SECTION DETAIL
A8.03 1 1/2" = 1'-0"

Copyright : These Drawings are the property of DP3 Architects, Ltd., and reuse on any other project without written permission will result in legal action.

DRAWING NOTES

Seal

19 MAR 2026

DP3 ARCHITECTS

DP3 Architects, Ltd.
15 South Main Street, Suite 400
Greenville, SC 29601
864.232.8200
www.DP3architects.com

Project

NEWBERRY COUNTY
PUBLIC SAFETY
COMPLEX

Project Number	23232
Drawn By	JMS/LEB
Checked By	RHW/JMS
Date	19 MAR 2026

Revisions

A	09 OCT 2024	30% SET
B	16 JAN 2026	60% SET
C	18 FEB 2026	90% SET
D	12 MAR 2026	PERMIT SET

Drawing

SECTION DETAILS

A8.03