NEWBERRY COUNTY AIRPORT

TERMINAL RENOVATION & EXPANSION

1139 AIRPORT ROAD
NEWBERRY, SC 29108

THE WILSON GROUP
ARCHITECT
PO BOX 5510•CHARLOTTE, NC 28299
(704) 331-9747
WWW.TWGARCHITECTS.COM

TALBERT, BRIGHT & ELLINGTON
PROJECT MANAGER | CIVIL ENGINEER
2000 PARK STREET, SUITE 101
COLUMBIA, SC 29201
(803) 933-9290

STEWART, INC.
CONSULTING STRUCTURAL ENGINEER
101 N. TRYON ST., SUITE 1400
CHARLOTTE, NC 28202
(704) 909-3523

SABER ENGINEERING
CONSULTING M E P ENGINEERS
2923 S. TRYON ST., SUITE 280
CHARLOTTE, NC 28203
(704) 373-0068

MAY 1, 2018

GENERAL

LIFE SAFETY

CIVIL

STRUCTURAL

ARCHITECTURAL

PLUMBING

MECHANICAL

ELECTRICAL

REVISIONS

STATE OF SOUTH CAROLINA
THE WILSON GROUP ARCHITECTS
Charlotte, NC
03022
REGISTERED ARCHITECTS

STATE OF SOUTH CAROLINA
BRIAN J. WILSON
Charlotte, NC
8481
REGISTERED ARCHITECT

5.1.18

NOTE:
GC TO COORDINATE DOOR LOCATION
W/ JAMB DETAIL TYP.

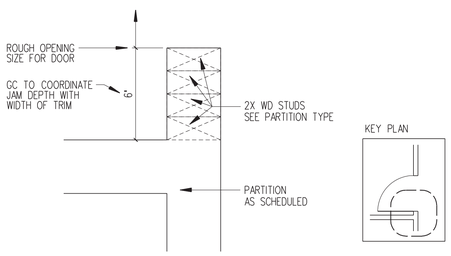

KEY PLAN

9 TYP. DOOR DETAIL

ELEVATIONS

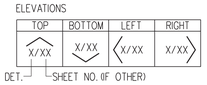

BUILDING SECTIONS

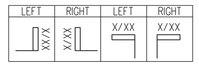

WALL SECTIONS

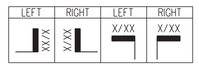

DETAIL

DOOR SYMBOL X XX

WINDOW SYMBOL X

PLAN LEGEND NOTE X

ROOM NAME OR ROOM NAME AND NO. NAME NAME XXXXX

REVISION SYMBOL X

WALL TYPE WT-X

MARBLE/STONE
METAL STUD PARTITION
PLASTER
PLYWOOD
POROUS FILL
QUARRY TILE
SLATE, FLAGSTONE OR SOAPSTONE
STEEL
TERRAZZO
WOOD
ACOUSTICAL TILE
BRICK
CERAMIC TILE
CONCRETE (with & without reinf. indicated) — W.W.F
CONCRETE MASONRY UNITS
CONCRETE, PRECAST
EARTH
FLOORING (resilient tile, linoleum)
GLASS
INSULATION

6 DRAWING SYMBOLS

NOTE

WHEN LESS THAN ALL SIXTEEN (16) DETAIL ZONES ARE UTILIZED OR WHEN ZONES ARE COMBINED, DETAIL NUMBERS WILL NOT BE CONSECUTIVE.

THE ZONE IN WHICH THE LOWER LEFT HAND CORNER OF A DETAIL IS LOCATED DETERMINES THE NUMBER OF THE DETAIL.

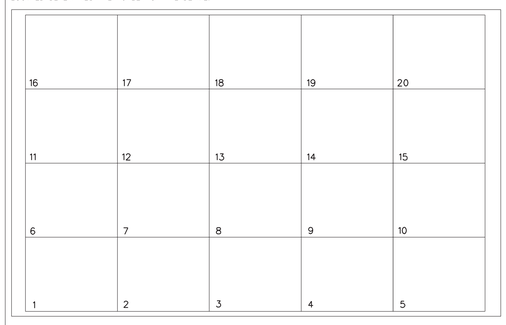

1 NUMBERING SYSTEM

SYMBOLS used as abbreviations:

∠	angle
℄	centerline
[	channel
#	number
o/w	otherwise
d	penny
⊥	perpendicular
lb	pounds
⅊	plate
ø	round (diameter)
w/	with
w/o	without

ABBREVIATIONS:

A.F.F.	above finished floor
AC.	acoustical
AC. Ins.	acoustical insulation
A.C.B.	acoustical ceiling board
A.T.	acoustical tile
ATWP	acoustical treatment wall panel
ADD.	addendum
ADJ.	adjacent
ADJT.	adjustable (ment)
AGG.	aggregate
A/C	air conditioning
ALT.	alternate
ALUM.	aluminum
ANC.	anchor, anchorage
A.B.	anchor bolt
ANOD.	anodized
APPROX.	approximate (ly)
ARCH.	architect (ural)
A.D.	area drain
A.I.	area inlet
ASB.	asbestos
ASPH.	asphalt
AUTO.	automatic
BSMT.	basement
B.PL.	bearing plate
B.M.	bench mark
BEL.	below
BET.	between
BVL.	beveled
BIT.	bituminous
BLK.	block
BLKG.	blocking
BD.	board
BOT.	bottom
BRK.	brick
BRZ.	bronze
BLDG.	building
B.L.	building line
B.U.R.	built up roofing
B.BD.	bulletin board
CAB.	cabinet
CAD.	cadmium
CPT.	carpet (ed)
CSMT.	casement
C.C.	colored concrete
C.I.	cast iron
CIPC.	cast-in-place concrete
C.B.	catch basin
CLG.	ceiling
CEM.	cement
CM.	centimeter (s)
CER.	ceramic
C.T.	ceramic tile
C.M.T.	ceramic mosaic (tile)
CTB	chalkboard/tackbd.
CHAM.	chamfer
CIR.	circle
CIRC.	circumference
CLR.	clear (ance)
C.O.	cleanout
CL.	closet
C.R.	cold rolled
COL.	column
COMB.	combination
CO.	company
COMPO.	composition (composite)
COMP.	compress (ed), (ion), (ible)
CONC.	concrete
C.M.U.	concrete masonry unit
CONST.	construction
CONT.	continuous
CONTR.	contract (or)
C.L.L.	contract limit line
C.JT.	control joint
CPR.	copper
C.G.	corner guard
CORR.	corrugated
C.M.P.	corrugated metal pipe
C.S.	concrete sealed
CTR.	counter
CFL.	counterflashing
CTSK.	countersunk
C.F.T.	cubic foot
C.YD.	cubic yard
DP.	dampproofing
D.L.	dead load
DEM.	demolish, demolition
DEP.	depressed
DTL.	detail
DIAG.	diagonal
DIAM.	diameter
DIM.	dimension
DIV.	division
DR.	door
D.A.	double acting
D.H.	double hung
D.C.I.	double curb inlet
DN.	down
DS.	downspout
DWR.	drawer
DWG.	drawing
D.F.	drinking fountain
D.I.P.	ductile iron pipe
EA.	each
E.F.	each face
E.W.	each way
	east
ELEC.	electric (al)
E.P.	electrical panelboard
E.D.F.	electric drinking fountain
EL.	elevation
ELEV.	elevator
EMER.	emergency
E.T.S.	emer. tel. system
ENCL.	enclose (ure)
EQ.	equal
EQP.	equipment
EST.	estimate
EXH.	exhaust
EXIST.	existing
EX.	expansion
E.B.	expansion bolt
E.J.	expansion joint
EXP.	exposed
EXT.	exterior
F.W.C.	fabric wallcovering
F.B.	face brick
F.O.C.	face of concrete
F.O.F.	face of finish
F.O.M.	face of masonry
F.O.S.	face of studs
F.F.	factory finish
FAS.	fasten (er)
FN.	fence
FBD.	fiberboard
FGL.	fiberglass
FIN.	finish (ed)
F.F.E.	finished floor elevation
F.F.L.	finished floor line
F.A.	fire alarm
F.E.	fire extinguisher
F.E.C.	fire extinguisher cabinet
F.H.C.	fire hose cabinet
FPL.	fireplace
FP.	fireproof
FRT.	fire-retardant
FLG.	flashing
F.H.M.S.	flathead machine screw
F.H.W.S	flathead wood screw
FLX.	flexible
FL.	floor (ing)
F.D.	floor drain
F.PL.	floor plate
FLUOR.	fluorescent
F.JT.	flush joint
FT.	foot (feet)
FTG.	footing
FND.	foundation
FR.	frame (d), (ing)
F.S.	full size
FUR.	furred (ing)
FUT.	future
GA.	gage, gauge
GALV.	galvanized
G.I.	galvanized iron
G.P.	galvanized pipe
G.C.	general contract (or)
GL.	glass, glazing
GL.B.	glass block
G.M.U.	glazed masonry units
G.S.U.	glazed structural unit
G.B.	grab bar
GR.	grade
GYP. D.W.	gypsum dry wall
GYP. PL.	gypsum plaster
GYP. SHTH	gypsum sheathing
GYP. T.	gypsum tile
G.W.B.	gypsum wallboard
HH.	handhole
H.BD.	hardboard
HDW.	hardware
HWD.	hardwood
H.JT.	head joint
HDR.	header
HTG.	heating
HVAC.	heating/ventilating/ air conditioning
H.D.	heavy duty
HT.	height
HEX.	hexagonal
H.C.	hollow core
H.M.	hollow metal
HK.	hook (s)
HOR.	horizontal
H.B.	hose bibb
H.W.H.	hot water heater
IN.	inch
INCL.	include (d), (ing)
I.D.	inside diameter
INS.	insulate (d), (ion)
INT.	interior
INTM.	intermediate
INV.	invert
I.P.S.	iron pipe size
J.C.	janitor's closet
JT.	joint
JST.	joist
KPL.	kickplate
KIT.	kitchen
KDN.	knockdown
K.O.	knockout
LBL.	label
LAB.	laboratory
LAD.	ladder
L.B.	lag bolt
LAM.	laminate (d)
LAV.	lavatory
L.H.	left hand
L.	length (long)
LT.	light
L.T.WT.	lightweight
L.W.C.	lightweight concrete
LMS.	limestone
L.O.C.	limits of construction
L.F.	linear foot
LTL.	lintel
LL.	live load
L.VR.	louver
L.PT.	low point
LUM.	luminous
MH.	manhole
MFR.	manufacture (er)
MAR.	marble
MAS.	masonry
M.O.	masonry opening
MATL.	material (s)
MAX.	maximum
MECH.	mechanic (al)
M.C.	medicine cabinet
MED.	medium
MBR.	member
M.W.	membrane waterproofing
M.B.	menu-board
MET.	metal
M.F.D.	metal floor decking
M.T.	metal threshold
	meter (s)
MM.	millimeter (s)
MWK.	millwork
MIN.	minimum
MIR.	mirror
MISC.	miscellaneous
MOD.	modular
MLD.	moulding
M.H.	mop holder
M.R.	mop receptor
MT.	mount (ed), (ing)
MOV.	movable
MULL.	mullion
NAT.	natural
NI.	nickel
N.R.	noise reduction
N.R.C.	noise reduction coefficient
NOM.	nominal
N.	north
N.I.C.	not in contract
N.T.S.	not to scale
OBS.	obscure
O.C.	on center (s)
OFC.	office
OP.	opaque
OPNG.	opening
OPP.	opposite
OPH.	opposite hand
O.D.	outside diameter
O.H.M.S.	overhead machine screw
O.H.W.S.	overhead wood screw
PNT.	paint (ed)
PR.	pair
PNL.	panel
P.B.	panic bar
P.T.D.	paper towel dispenser
P.T.R.	paper towel receptor
PAR.	parallel
PK.	parking
P.BD.	particle board
PTN.	partition
PAV.	paving
PVMT.	pavement
PED.	pedestal
PTHSE.	penthouse
PERF.	perforate (d)
PERIM.	perimeter
PLAS.	plaster
P.LAM.	plastic laminate
PL.	plate
PWD.	plywood
PT.	point
POL.	polished
P.V.C.	polyvinyl chloride
P.E.	porcelain enamel
P.P.	public phone
P.C.P.	portland cement plaster
P.T.C.	post-tensioned concrete
P.C.F.	pounds per cubic foot
P.L.F.	pounds per linear foot
P.S.F.	pounds per square foot
P.S.I.	pounds per square inch
P.C.C.	precast concrete
PREF.AB.	prefabricate (d)
PREFIN.	prefinished
PRF.	preformed
P.S.C.	prestressed concrete
P.L.	property line
P.T.	porcelain tile
Q.T.	quarry tile
QTY.	quantity
QTR.	quarter (ed)
RBT.	rabbet (ed)
RAD.	radius
RECEP.	receptacle
RL.	rail (ing)
RE.	reference
REFL.	reflect (ed)
REFR.	refrigerator
REG.	register
REINF.	reinforce (d), (ing)
R.C.P.	reinforced concrete pipe
REQD.	required
RES.	resilient
RES.B.	resilient base
RES.FL.	resilient floor
RES.T.	resilient tile
R.A.	return air
REV.	revision (s), (ed)
R.H.	right hand
R.H.R.	right hand reverse
R.O.W.	right of way
R.	riser
R.D.	roof drain
RFG.	roofing
RM.	room
R.O.	rough opening
RUB.	rubber
R.B.	rubber base
R.T.	rubber tile
S.N.D.	sanitary napkin dispenser
SCHED.	schedule
SECT.	section
S.SK.	service sink
SHTH.	sheathing
SHT.	sheet
SH.	shelf, shelving
SIM.	similar
S.C.	solid core
S.	south
SPK.	speaker
SPEC.	specification (s)
SQ.	square
S.S.	stainless stel
STD.	standard
STA.	station
STL.	steel
STOR.	storage
S.D.	storm drain
STRUCT.	structural
S.C.T.	structural clay tile
S.G.T.	structural glazed tile
SURF.	surface
SUSP.	suspended
SYM.	symmetry (or symbol)
SYN.	synthetic
SYS.	system
TKBD.	tackboard
TEL.	telephone
TV.	television
T.C.	terra cotta
TER.	terrazzo
THK.	thick (ness)
THR.	threshold
T.PTN.	toilet partition
T.P.D.	toilet paper dispenser
TOL.	tolerance
T&G.	tongue and groove
T.O.C.	top of curb
T.O.SL.	top of slab
T.O.S.	top of steel
T.O.S-F.	top of sub-floor
T.O.W.	top of wall
T.B.	towel bar
T.D.	towel dispenser
T.	tread
TYP.	typical
UC.	undercut
U.L.	Underwriter's Lab, Inc.
U.N.O.	unless noted otherwise
UNF.	unfinished
UR.	urinal
V.JT.	v-joint (ed)
V.B.	vapor barrier
VARR.	varies
V.	vent
VNR.	veneer
VRM.	vermiculite
VERT.	vertical
VEST.	vestibule
V.C.P.	vitrified clay pipe
VIN.	vinyl
V.B.	vinyl base
V.C.T.	vinyl composition tile
V.F.	vinyl fabric
V.T.	vinyl tile
WSCT.	wainscot
W.T.W.	wall to wall
W.H.	wallhung
W.C.	water closet
WP.	waterproofing (weatherproofing)
W.R.	water repellent (water resistant)
WS.	waterstop
WT.	weight
W.W.F.	welded wire fabric
W	west
WH.B.	wheel bumper
W.	width, wide
W.F.	wide flange
WIN.	window
W.G.	wire glass
WD.	wood
WD.B.	wood base
W.PT.	working point
W.I.	wrought iron
YD.	yard

2 STANDARD ABBREVIATIONS

11 VICINITY MAP

NOT TO SCALE

COM*check* Software Version 4.0.8.1

Envelope Compliance Certificate

Section 1: Project Information

Energy Code: **2009 IECC**
Project Title: Newberry County Airport Terminal Renovation & Expansion
Project Type: Addition

Construction Site:	Owner/Agent:	Designer/Contractor:
Newberry County Airport 1139 Airport Rd Newberry, SC 29108	Newberry County Airport	The Wilson Group PO Box 5510 Charlotte, NC 28299

Building Location (for weather data): Newberry, South Carolina
Climate Zone: 3a
Vertical Glazing / Wall Area Pct.: **10%**

Building Uss: Activity Type(s)	Floor Area
1-Airport Terminal (Transportation) : Nonresidential	1007

Section 2: Envelope Assemblies and Requirements Checklist

Envelope PASSES: Design 5% better than code.

Envelope Assemblies:

Component Name/Description	Gross Area or Perimeter	Cavity R-Value	Cont. R-Value	Proposed U-Factor	Budget U-Factor(a)
Floor 1: Slab-On-Grade:Unheated, [Bldg. Use 1 - Airport Terminal]	1007	---	---	---	---
Exterior Wall 1: Concrete Block:8", Solid Grouted,Medium Density , Furring: Wood, [Bldg. Use 1 - Airport Terminal]	1130	1.1	10.6	0.072	0.123
Window 1: Metal Frame Curtain Wall/Storefront, Perf. Specs.: Product ID NA, SHGC 0.35, [Bldg. Use 1 - Airport Terminal] (b)	107	---	---	0.350	0.600
Door 1: Glass (> 50%,glazing):Metal Frame, Entrance Door, Perf. Specs.: Product ID NA, SHGC 0.35, PF 0.75, [Bldg. Use 1 - Airport Terminal] (b)	60	---	---	0.350	0.900
Exterior Wall 2: Wood-Framed, 16" o.c., [Bldg. Use 1 - Airport Terminal]	598	0.0	10.6	0.070	0.089
Window 2: Metal Frame Curtain Wall/Storefront, Perf. Specs.: Product ID NA, SHGC 0.35, PF 1.00, [Bldg. Use 1 - Airport Terminal] (b)	67	---	---	0.350	0.600
Exterior Wall 3: Concrete Block:8", Solid Grouted,Medium Density , Furring: Wood, [Bldg. Use 1 - Airport Terminal]	262	1.1	10.6	0.072	0.123
Exterior Wall 4: Wood-Framed, 16" o.c., [Bldg. Use 1 - Airport Terminal]	262	0.0	10.6	0.070	0.089
Roof 1: Insulation Entirely Abcve Deck, [Bldg. Use 1 - Airport Terminal]	1007	---	30.0	0.032	0.048

(a) Budget U-factors are used for software baseline calculations ONLY, and are not code requirements.
(b) Fenestration product performance must be certified in accordance with NFRC and requires supporting documentation.

Air Leakage, Component Certification, and Vapor Retarder Requirements:

- ☐ 1. All joints and penetrations are caulked, gasketed or covered with a moisture vapor-permeable wrapping material installed in accordance with the manufacturer's installation instructions.
- ☐ 2. Windows, doors, and skylights certified as meeting leakage requirements.
- ☐ 3. Component R-values & U-factors labeled as certified.
- ☐ 4. No roof insulation is installed on a suspended ceiling with removable ceiling panels.
- ☐ 5. "Other" components have supporting documentation for proposed U-Factors.

Project Title: Newberry County Airport Terminal Renovation & Expansion
Data filename: P:\9198_Newberry GA Terminal Renovation\Documents\Notebook\9198_Comcheck.cck
Report date: 03/16/18
Page 1 of 2

- ☐ 6. Insulation installed according to manufacturer's instructions, in substantial contact with the surface being insulated, and in a manner that achieves the rated R-value without compressing the insulation.
- ☐ 7. Stair, elevator shaft vents, and other outdoor air intake and exhaust openings in the building envelope are equipped with motorized dampers.
- ☐ 8. Cargo doors and loading dock doors are weather sealed.
- ☐ 9. Recessed lighting fixtures installed in the building envelope are Type IC rated as meeting ASTM E283, are sealed with gasket or caulk.
- ☐ 10. Building entrance doors have a vestibule equipped with self-closing devices.

Exceptions:

- ☐ Building entrances with revolving doors.
- ☐ Doors not intended to be used as a building entrance.
- ☐ Doors that open directly from a space less than 3000 sq. ft. in area.
- ☐ Doors used primarily to facilitate vehicular movement or materials handling and adjacent personnel doors.
- ☐ Doors opening directly from a sleeping/dwelling unit.

Section 3: Compliance Statement

Compliance Statement: The proposed envelope design represented in this document is consistent with the building plans, specifications and other calculations submitted with this permit application. The proposed envelope system has been designed to meet the 2009 IECC requirements in COM*check* Version 4.0.8.1 and to comply with the mandatory requirements in the Requirements Checklist.

Ryan Kenedy — Name - Title
Ryan Kenedy — Signature
3/16/18 — Date

Project Title: Newberry County Airport Terminal Renovation & Expansion
Data filename: P:\9198_Newberry GA Terminal Renovation\Documents\Notebook\9198_Comcheck.cck
Report date: 03/16/18
Page 2 of 2

3 ENERGY CODE

NEWBERRY COUNTY AIRPORT

TERMINAL RENOVATION & EXPANSION

STATE OF SOUTH CAROLINA — THE WILSON GROUP ARCHITECTS, Charlotte, NC 03022 — REGISTERED ARCHITECTS

STATE OF SOUTH CAROLINA — BRIAN K. WILSON, Charlotte, NC 6451 — REGISTERED ARCHITECT — 5-1-18

ARCHITECT

THE WILSON GROUP
P O BOX 5510
CHARLOTTE, NC 28299
(704) 331-9747

PROJECT MANAGER I CIVIL ENGINEER
TALBERT, BRIGHT & ELLINGTON
2000 PARK STREET, SUITE 101
COLUMBIA, SC 29201
(803) 933-9290

STRUCTURAL ENGINEER
STEWART
101 N. TRYON ST., SUITE 1400
CHARLOTTE, NC 28202
(704) 909-3523

MECHANICAL, ELECTRICAL, & PLUMBING ENGINEER
SABER ENGINEERING
2923 S. TRYON ST., SUITE 280
CHARLOTTE, NC 28203
(704) 373-0068

REVISIONS

DATE	MAY 1, 2018
PROJECT NUMBER	9198-000

SHEET TITLE
GENERAL NOTES

SHEET NUMBER
G-002

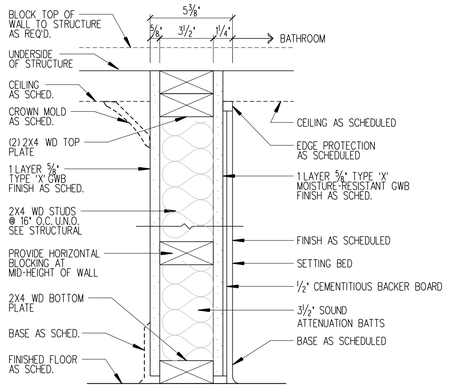

16 PARTITION TYPE W–03 3" = 1'–0"

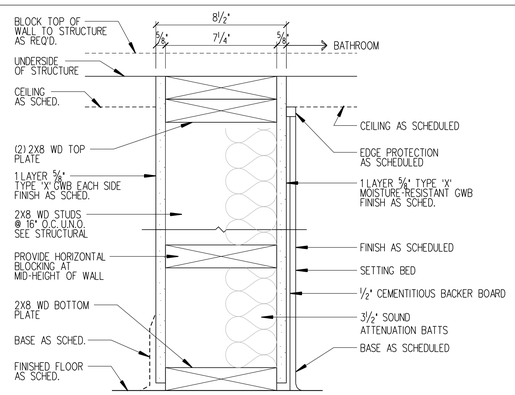

17 PARTITION TYPE W–04 3" = 1'–0"

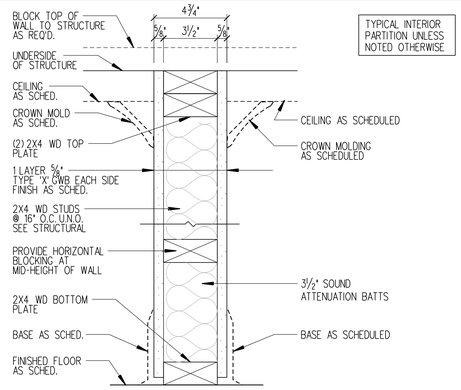

TYPICAL INTERIOR PARTITION UNLESS NOTED OTHERWISE

11 PARTITION TYPE W–01 3" = 1'–0"

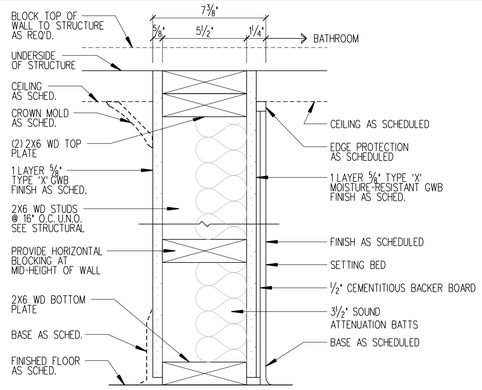

12 PARTITION TYPE W–02 3" = 1'–0"

CODE SUMMARY

SCOPE OF WORK: EXISTING RENOVATION AND NEW EXPANSION
OCCUPANCY: BUSINESS (B)
CONSTRUCTION TYPE: V-B
FIRE PROTECTION SYSTEM: N/A
BUILDING AREA: 1,007 SF TOTAL (<9,000 SF MAX. FOR TYPE V-B BUSINESS NON-SPRINKLERED)
BUILDING HEIGHT: 20'-0" A.F.F. (<40' MAX. FOR TYPE V-B BUSINESS NON-SPRINKLERED)
SEPARATION DISTANCE: > 30'
NUMBER OF STORIES: 1
RATED ASSEMBLIES: N/A
OCCUPANT LOAD: 30 (SEE SUMMARY ON 1/LS-101)

WALL LEGEND

NEW CONSTRUCTION	
1 HR RATED WALL	

FIRE EXTINGUISHER LEGEND

AREA SERVED BY FEC	1,007	SF
HAZARD LEVEL:	LOW HAZARD	
MIN SF / A	1,500	SF
EXTINGUISHER TYPE	2-A	
SF / EXTINGUISHER	3,000	SF
NUMBER OF EXTINGUISHERS	(1) 2-A	
SF OF AREA SERVED	3,000	SF
MAX. TRAVEL DISTANCE	75	FT

LIFE SAFETY PLAN LEGEND

NUMBER OF OCCUPANTS (F)	X		
EXIT WIDTH	ACTUAL CLEAR (IN) X" / ACTUAL (OCC) (F) XXX/XXX	MAX (OCC) (G)	
MAXIMUM AREA DIAGONAL	X'		
DISTANCE BETWEEN EXITS *	REQUIRED X'-X"	ACTUAL	
EXIT ACCESS TRAVEL DISTANCE	ACTUAL X'-X"	ALLOWABLE	
PANIC HARDWARE	P	DELAYED EGRESS LOCK	D
ELECT. EGRESS LOCK	E	HOLD OPEN DEVICES	H
EXIT ARROW			

* PER IBC 2015 1006.3.2, SINGLE EXIT IS PERMITTED

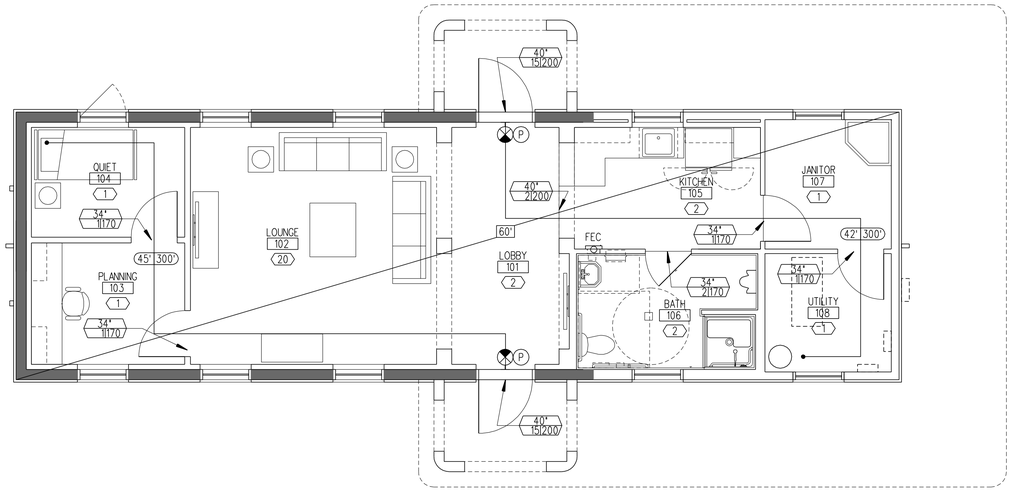

1 FIRST LEVEL LIFE SAFETY PLAN 1/4" = 1'–0"

OCCUPANCY CALCULATIONS

(A) ROOM NO.	(B) ROOM NAME	(C) OCCUPANCY TYPE	(D) AREA (SF)	(E) AREA / OCC	(F) D/E ACTUAL OCC	(G) L/J MAX OCC	(H) STAIR IN/OCC	(I) F*H STAIR IN REQ	(J) OTHER IN/OCC	(K) F*J OTHER IN REQ.	(L) ACTUAL CLEAR
101	LOBBY	BUSINESS AREAS	157	100	2	400			0.2	0.4	80
102	LOUNGE	ASSEMBLY,NON (TABLES & CHAIRS)	287	15	20	745			0.2	4	149
103	PLANNING	BUSINESS AREAS	98	100	1	170			0.2	0.2	34
104	QUIET ROOM	BUSINESS AREAS	94	300	1	170			0.2	0.2	34
105	KITCHEN	BUSINESS AREAS	113	100	2	200			0.2	0.4	40
106	BATH	BUSINESS AREAS	104	100	2	170			0.2	0.4	34
107	JANITOR	STORAGE	80	300	1	170			0.2	0.2	34
108	UTILITY	MECHANICAL EQUIPMENT	74	100	1	170			0.2	0.2	34
TOTAL			1,007		30		REQ.	0	REQ.	6	
							PROV.	N/A	PROV.	439	

NEWBERRY COUNTY AIRPORT

TERMINAL RENOVATION & EXPANSION

STATE OF SOUTH CAROLINA
THE WILSON GROUP ARCHITECTS
Charlotte, NC
03022
REGISTERED ARCHITECTS

STATE OF SOUTH CAROLINA
BRIAN K. WILSON
Charlotte, NC
6451
REGISTERED ARCHITECT
5-1-18

ARCHITECT

THE WILSON GROUP
P O BOX 5510
CHARLOTTE, NC 28299
(704) 331-9747

PROJECT MANAGER I CIVIL ENGINEER
TALBERT, BRIGHT & ELLINGTON
2000 PARK STREET, SUITE 101
COLUMBIA, SC 29201
(803) 933-9290

STRUCTURAL ENGINEER
STEWART
101 N. TRYON ST., SUITE 1400
CHARLOTTE, NC 28202
(704) 909-3523

MECHANICAL, ELECTRICAL, & PLUMBING ENGINEER
SABER ENGINEERING
2923 S. TRYON ST., SUITE 280
CHARLOTTE, NC 28203
(704) 373-0068

REVISIONS

DATE	MAY 1, 2018
PROJECT NUMBER	9198-000

SHEET TITLE

LIFE SAFETY PLAN AND PARTITION TYPES

SHEET NUMBER

LS-101

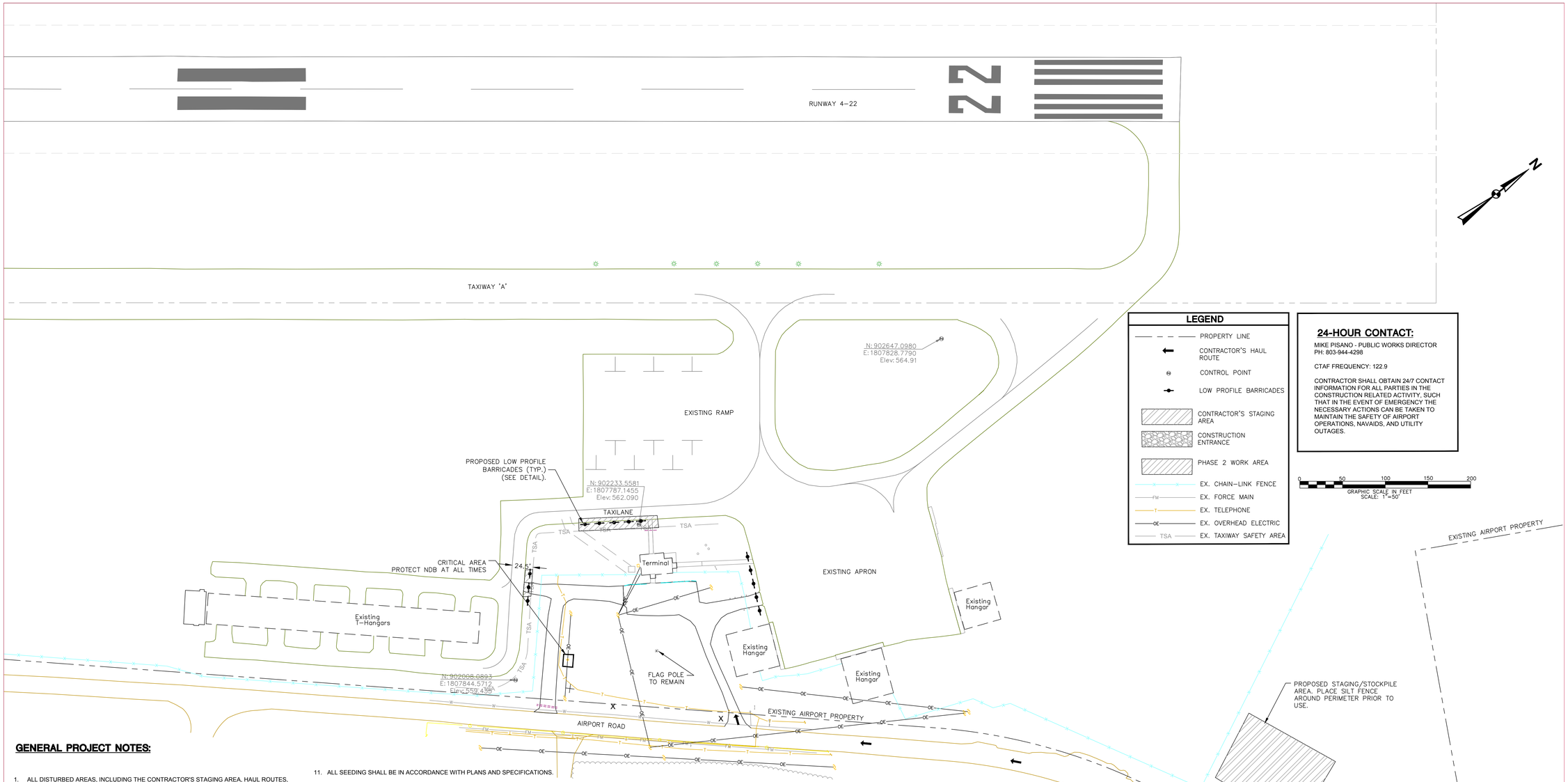

LEGEND

- PROPERTY LINE
- CONTRACTOR'S HAUL ROUTE
- CONTROL POINT
- LOW PROFILE BARRICADES
- CONTRACTOR'S STAGING AREA
- CONSTRUCTION ENTRANCE
- PHASE 2 WORK AREA
- EX. CHAIN–LINK FENCE
- EX. FORCE MAIN
- EX. TELEPHONE
- EX. OVERHEAD ELECTRIC
- EX. TAXIWAY SAFETY AREA

24-HOUR CONTACT:

MIKE PISANO - PUBLIC WORKS DIRECTOR
PH: 803-944-4298

CTAF FREQUENCY: 122.9

CONTRACTOR SHALL OBTAIN 24/7 CONTACT INFORMATION FOR ALL PARTIES IN THE CONSTRUCTION RELATED ACTIVITY, SUCH THAT IN THE EVENT OF EMERGENCY THE NECESSARY ACTIONS CAN BE TAKEN TO MAINTAIN THE SAFETY OF AIRPORT OPERATIONS, NAVAIDS, AND UTILITY OUTAGES.

0 50 100 150 200
GRAPHIC SCALE IN FEET
SCALE: 1"=50'

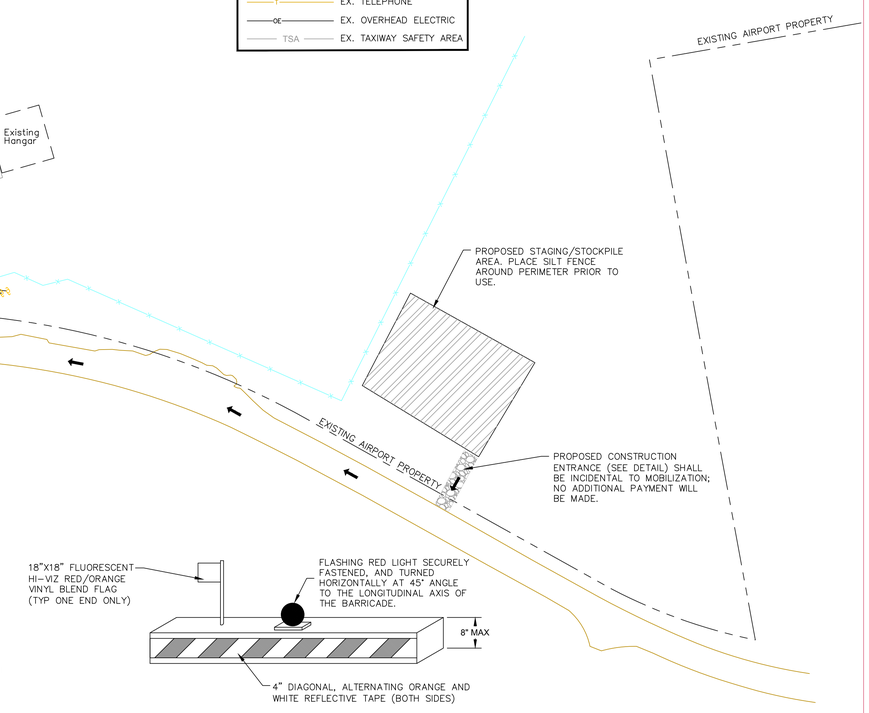

GENERAL PROJECT NOTES:

1. ALL DISTURBED AREAS, INCLUDING THE CONTRACTOR'S STAGING AREA, HAUL ROUTES, GRADING LIMITS, ETC. SHALL BE RESTORED TO A SMOOTH LINE AND GRADED WITH POSITIVE DRAINAGE. THE CONTRACTOR SHALL SEED AND MULCH ALL DISTURBED AREAS. ANY DAMAGE BY THE CONTRACTOR TO EXISTING CONDITIONS (SUCH AS ROADWAY, TAXIWAY, LIGHTS, ETC.) SHALL BE REPAIRED AT HIS EXPENSE. THERE WILL BE NO MEASUREMENT FOR PAYMENT OF SEEDING AND MULCHING REQUIRED OUTSIDE THE GRADING LIMITS, APPROVED STOCKPILE LIMITS, OR APPROVED HAUL LIMITS.
2. UPON COMPLETION OF THE PROJECT, THE CONTRACTOR SHALL MAKE ALL NECESSARY REPAIRS TO THE HAUL ROAD AND CONTRACTOR STAGING AREA AS ORDERED BY THE ENGINEER. THE REPAIRS TO THE HAUL ROAD AND STAGING AREA SHALL BE INCIDENTAL TO THE PROJECT.
3. THE OWNER RESERVES THE RIGHT TO CONTRACT AND PERFORM OTHER OR ADDITIONAL WORK ADJACENT TO AND WITHIN THE WORK AREA COVERED BY THIS CONTRACT. WHEN SEPARATE CONTRACTS ARE LET WITHIN THE LIMITS OF ANY ONE PROJECT, EACH CONTRACTOR SHALL CONDUCT HIS WORK SO AS NOT TO INTERFERE WITH OR HINDER THE PROGRESS OR THE COMPLETION OF THE WORK BEING COMPLETED BY OTHER CONTRACTORS. THE CONTRACTORS WORKING ON THE SAME PROJECT SHALL COOPERATE WITH EACH OTHER AS ORDERED BY THE ENGINEER. ANY ADDITIONAL EFFORT OR WORK REQUIRED FOR SUCH COORDINATION WITH OTHER CONTRACTORS SHALL BE INCIDENTAL TO THE PROJECT AND NO SEPARATE MEASUREMENT OR PAYMENT WILL BE MADE. REFERENCE IS DIRECTED TO SECTION 50 OF THE SPECIFICATIONS. CONTRACTOR IS MADE AWARE THAT THERE MAY BE OTHER CONSTRUCTION PROJECTS BEING CONSTRUCTED AT THE AIRPORT IN THE VICINITY OF THIS PROJECT.
4. NO DEBRIS OF ANY NATURE SHALL BE ALLOWED IN ACTIVE AIRCRAFT OPERATIONS AREAS. ALL LOOSE MATERIALS (DIRT, STONE, PAVEMENT, FORMING, ETC.) MUST BE KEPT WITHIN THE LIMITS OF CONSTRUCTION. WHEN THE CONSTRUCTION BARRIERS ARE MOVED DURING CONSTRUCTION, THE CLEANUP OF THE AREAS OUTSIDE THE BARRIERS SHALL OCCUR PRIOR TO MOVING. IN ADDITION, NO LOOSE MATERIALS THAT COULD BLOW INTO AIRCRAFT OPERATIONS AREAS SHALL BE ALLOWED IN THE CONSTRUCTION AREA. THE CONTRACTOR SHALL BE REQUIRED TO KEEP A TRACTOR WITH BROOM ON THE JOBSITE AT ALL TIMES.
5. THE CONTRACTOR'S EMPLOYEE PARKING SHALL BE IN THE STAGING AREA AS SHOWN. AT THE END OF EACH WORK DAY, THE CONTRACTOR SHALL POSITION ALL EQUIPMENT, TOOLS, MATERIAL, ETC., IN THE APPROVED CONTRACTOR'S STAGING AREA UNLESS OTHERWISE REQUESTED BY THE CONTRACTOR AND APPROVED BY THE ENGINEER.
6. THE CONTRACTOR SHALL MAINTAIN POSITIVE DRAINAGE ON THE PROJECT FOR THE COMPLETE DURATION OF THE PROJECT.
7. CONTRACTOR SHALL CLEAN ALL CONSTRUCTION AREAS OF LITTER, LOOSE PAPERS, DEBRIS, ETC. ON A DAILY BASIS, OR AS DIRECTED BY THE ENGINEER. THE CONTRACTOR SHALL KEEP ALL ROADWAYS CLEAR OF DEBRIS, STONES, LITTER, ETC. DURING CONSTRUCTION. ALL PAVEMENTS SHALL BE CLEANED OF CONSTRUCTION DEBRIS AND SPILLAGE IMMEDIATELY. CONTRACTOR SHALL VISUALLY INSPECT PAVEMENTS DURING THE HAULING OPERATIONS.
8. CONTRACTOR IS RESPONSIBLE FOR COORDINATION WITH UTILITY PROVIDERS AS NEEDED FOR THE PROJECT.
9. CONTRACTOR PROGRESS MEETINGS WILL BE HELD BI-WEEKLY OR AS NEEDED. OPERATIONAL SAFETY SHALL BE A STANDING AGENDA ITEM FOR DISCUSSION DURING PROGRESS MEETINGS THROUGHOUT THE PROJECT.
10. CONTRACTOR SHALL MAINTAIN FULL PERIMETER FENCING AT ALL TIMES. NO ACCESS GATES SHALL REMAIN OPEN UNLESS MANNED BY A GATE GUARD EMPLOYEE OF THE CONTRACTOR WHO IS PROFICIENT IN SPEAKING ENGLISH.
11. ALL SEEDING SHALL BE IN ACCORDANCE WITH PLANS AND SPECIFICATIONS.
12. CONTRACTORS OPERATING CONSTRUCTION VEHICLES AND EQUIPMENT ON THE AIRPORT MUST BE PREPARED TO EXPEDITIOUSLY CONTAIN AND CLEAN-UP SPILLS RESULTING FROM FUEL OR HYDRAULIC FLUID LEAKS. TRANSPORT AND HANDLING OF OTHER HAZARDOUS MATERIALS ON AN AIRPORT ALSO REQUIRES SPECIAL PROCEDURES. SEE FAA'S ADVISORY CIRCULAR 150/5320-15, MANAGEMENT OF AIRPORT INDUSTRIAL WASTE.
13. CONTRACTOR TO PROVIDE A LIST OF RESPONSIBLE REPRESENTATIVES / POINTS OF CONTACT TO THE OWNER AND ENGINEER AT THE PRE-CONSTRUCTION MEETING, INCLUDING CONTACTS THAT WILL BE AVAILABLE 24 HOURS PER DAY.
14. THE OWNER WILL NEED MINIMUM 14 DAYS NOTICE TO ISSUE ANY AND ALL NOTAMS REQUIRED FOR THE PROJECT.
15. EMERGENCY NOTIFICATION PROCEDURES FOR MEDICAL, FIRE FIGHTING, AND POLICE RESPONSE WILL BE DISCUSSED AT THE PRE-CONSTRUCTION MEETING WITH THE OWNER.
16. INSPECTIONS SHALL BE CONDUCTED DAILY TO ENSURE CONFORMANCE WITH THIS CSPP. THESE INSPECTIONS SHALL INCLUDE FOD DETECTION AND REMOVAL. A FINAL INSPECTION WILL BE HELD AT THE END OF CONSTRUCTION TO ENSURE CONFORMANCE WITH THE CONTRACT DOCUMENTS.
17. CONTRACTOR SHALL ABIDE BY THIS CSPP AND THE FAA'S ADVISORY CIRCULAR 150-5370-2F, OPERATIONAL SAFETY ON AIRPORTS DURING CONSTRUCTION, AT ALL TIMES WHILE WORKING ON THE AIRPORT. FAILURE TO DO SO MAY RESULT IN PENALTIES, SUCH AS FOR RUNWAY INCURSIONS.
18. THE CONTRACTOR, ENGINEER, AND OWNER SHALL PERFORM ONSITE INSPECTIONS THROUGHOUT THE PROJECT WITH IMMEDIATE REMEDY OF ANY DEFICIENCIES WETHER CAUSED BY NEGLIGENCE, OVERSIGHT, OR PROJECT SCOPE CHANGE.
19. THE CONTRACTOR SHALL BE REQUIRED TO CARRY A RADIO CAPABLE OF MONITORING AIR TRAFFIC. THE RADIO SHALL BE IN WORKING CONDITION AND ON DURING ALL CONSTRUCTION ACTIVITIES. CTAF FREQUENCY IS 122.9 FOR NEWBERRY COUNTY AIRPORT.
20. THE USE OF THE TEMPORARY SAFE-UP DETAIL (SEE MISCELLANEOUS DETAIL SHEET) IS REQUIRED WHEN WORK WITHIN THE TAXIWAY SAFETY AREA (TSA) IS INCOMPLETE.

CONSTRUCTION PHASING

PHASE	DURATION		DESCRIPTION OF WORK
1	120	-	WORK FOR THIS PROJECT WILL BE TWO PHASES THAT RUN CONCURRENT (ONLY 120 DAYS TOTAL).
		-	WORK INCLUDES ALL ASPECTS OF THE PROJECT INCLUDING BUILDING CONSTRUCTION - AND SITE CONSTRUCTION. DEMOLITION, GRADING, EROSION AND SEDIMENT CONTROL, INSTALL OF UTILITIES, PAVING, FENCE, AND MARKING.
2	5		WORK INSIDE THE TAXIWAY SAFETY AREA (TSA) WILL REQUIRE CLOSURE OF TAXILANE AND A NOTAM. THE CLOSURE SHALL LAST NO MORE THAN 5 DAYS.

PHASING NOTES:

1. CONTRACT TIME:
   THE CONTRACTOR SHALL HAVE A TOTAL OF ONE HUNDRED TWENTY (120) CALENDAR DAYS TO COMPLETE THE ENTIRE PROJECT. CONTRACTOR SHALL HAVE A TOTAL OF FIVE (5) CALENDAR DAYS TO COMPLETE WORK INSIDE THE TAXIWAY SAFETY AREA (PHASE 2 WORK AREA). LIQUIDATED DAMAGES IN THE AMOUNT OF $1,000.00 PER CALENDAR DAY WILL BE ASSESSED AGAINST THE CONTRACTOR FOR EVERY CALENDAR DAY THAT THE PHASE 2 CONTRACT TIME AS WELL AS THE TOTAL CONTRACT TIME IS EXCEEDED.
2. THERE SHALL BE NO OPEN TRENCHES ADJACENT TO ANY ACTIVE AIRFIELD PAVEMENT DURING ANY PORTION OF THIS PROJECT.
3. THE CONTRACTOR SHALL SUBMIT A DETAILED PRODUCTION SCHEDULE AND DETAILED CPM PROJECT SCHEDULE TO THE ENGINEER THREE DAYS PRIOR TO THE PRE-CONSTRUCTION CONFERENCE AND WHEN SUBMITTING REQUESTS FOR PAYMENT.

RUNWAY/TAXIWAY SAFETY AREAS:

1. NO WORK IN AN ACTIVE RUNWAY/TAXIWAY SAFETY AREA IS PERMITTED AND NO PERSONNEL/EQUIPMENT PULL BACKS TO CLEAR AN ACTIVE RUNWAY SAFETY AREA ARE PERMITTED. LOCAL NOTAMS SHALL BE IN EFFECT FOR ALL ACTIVITIES.
2. NO PERSONNEL, MATERIAL, AND/OR EQUIPMENT AS DEFINED IN AC 150/5300-13A, PARAGRAPH 308 MAY PENETRATE THE RUNWAY OBSTACLE FREE ZONE (ROFA) WHILE RUNWAY IS OPEN.
3. COORDINATE CONSTRUCTION ACTIVITY WITH AIRPORT MANAGEMENT.

LOW PROFILE BARRICADE DETAIL

NOT TO SCALE

NOTES:

1. BARRICADES SHALL CONFORM TO THE REQUIREMENTS OF FAA ADVISORY CIRCULAR 150/5370–2 (CURRENT EDITION) "OPERATIONAL SAFETY ON AIRPORTS DURING CONSTRUCTION". RED SOLAR LIGHT MUST MEET THE LUMINANCE REQUIREMENTS OF THE STATE HIGHWAY DEPARTMENT.
2. THE CONTRACTOR SHALL PROVIDE A SUFFICIENT NUMBER OF BARRICADES TO COMPLETE THE WORK. THIS ITEM IS INCIDENTAL TO THE PROJECT, INCLUDING MULTIPLE RELOCATIONS OF THE BARRICADES. NO SEPARATE PAYMENT WILL NE MADE.
3. SPACING OF BARRICADES SHALL ENSURE THAT THE DISTANCE BETWEEN LIGHTS IS NO MORE THAN 4 FEET. INSTALLATION OF MULTIPLE LIGHTS ON A SINGLE BARRICADE MAY BE REQUIRED. THE BARRICADES SHALL BE A MINIMUM OF 8" IN LENGTH.
4. THE CONTRACTOR SHALL MAINTAIN AND MAKE FREQUENT INSPECTION OF THE BARRICADES THROUGHOUT THE DURATION OF THE PROJECT. PROMPT REPAIRS INCLUDING REPLACEMENT OF FLASHING RED LIGHTS SHALL BE MADE AS NECESSARY.
5. BARRICADES SHALL BE WATER FILLED AND ADEQUATELY SECURED TO WITHSTAND HIGH WINDS AND/OR JET BLAST.
6. THE CONTRACTOR SHALL PROVIDE ENOUGH BARRICADES FOR THE PROJECT INCIDENTAL TO OTHER ITEMS. NO ADDITIONAL PAYMENT WILL BE MADE FOR BARRICADES.

PALMETTO UTILITY PROTECTION SERVICE
DIAL 811
CALL BEFORE YOU DIG

NEWBERRY COUNTY AIRPORT
1139 AIRPORT ROAD
NEWBERRY, SC 29108

TERMINAL RENOVATION & EXPANSION

SOUTH CAROLINA REGISTERED No. 22232 PROFESSIONAL ENGINEER J. ANDREW SHOUP 5/1/18

SOUTH CAROLINA CERTIFICATE OF AUTHORIZATION TALBERT, BRIGHT & ELLINGTON COA–4350

ARCHITECT

THE WILSON GROUP
P O BOX 5510
CHARLOTTE, NC 28299
(704) 331-9747

PROJECT MANAGER | CIVIL ENGINEER
TALBERT, BRIGHT & ELLINGTON
2000 PARK STREET, SUITE 101
COLUMBIA, SC 29201
(803) 933-9290

STRUCTURAL ENGINEER
STEWART
200 S. COLLEGE ST, SUITE 720
CHARLOTTE, NC 28202
(704) 334-7925

MECHANICAL, ELECTRICAL, PLUMBING & FIRE PROTECTION ENGINEER
SABER ENGINEERING
2923 SOUTH TRYON STREET, SUITE 280
CHARLOTTE, NC 28203
(704) 373-0068

REVISIONS

DATE	2018-04-11
PROJECT NUMBER	3309-1701
SHEET TITLE	

CONSTRUCTION SAFETY & PHASING PLAN

SHEET NUMBER

C-01

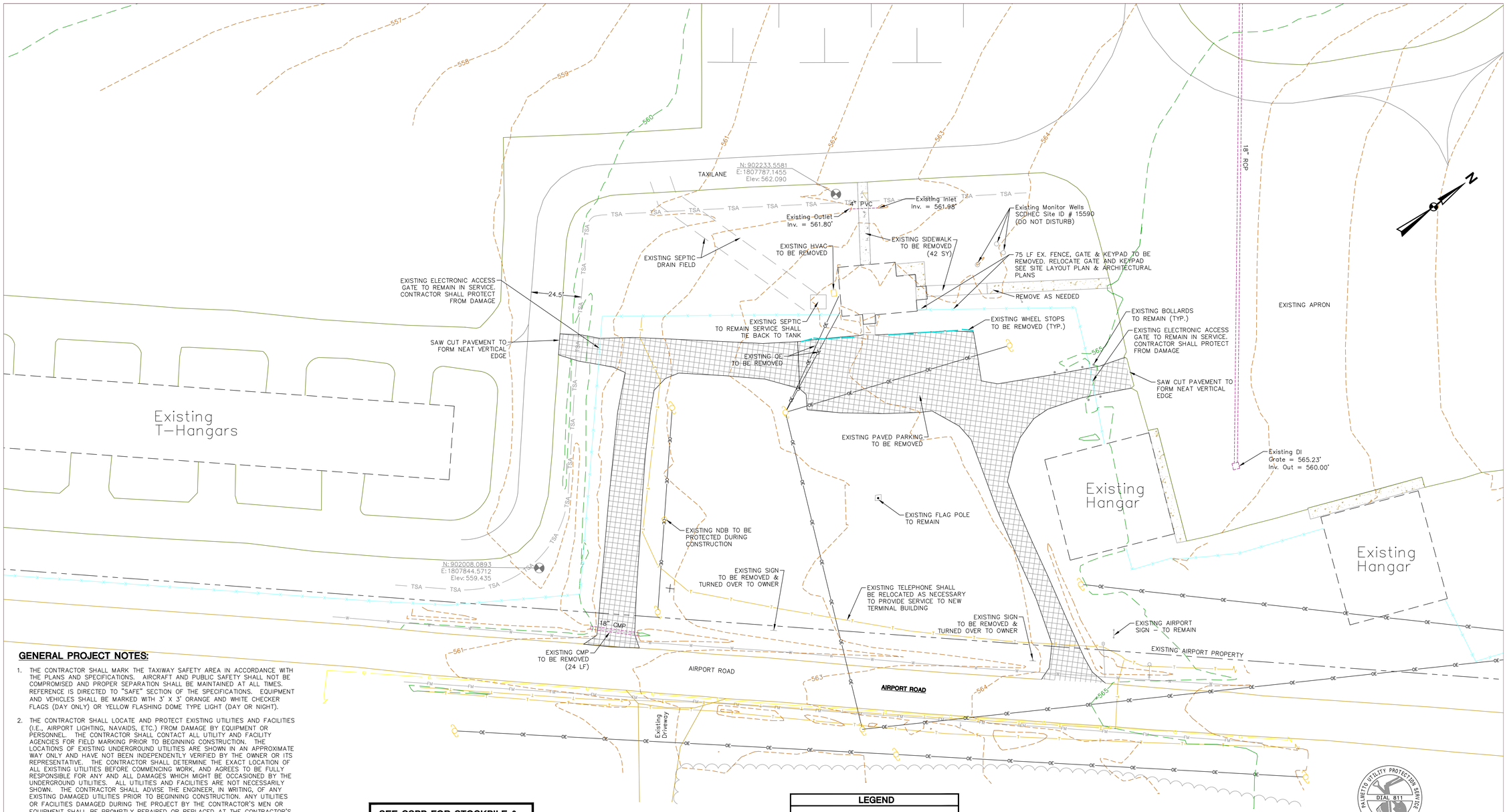

GENERAL PROJECT NOTES:

1. THE CONTRACTOR SHALL MARK THE TAXIWAY SAFETY AREA IN ACCORDANCE WITH THE PLANS AND SPECIFICATIONS. AIRCRAFT AND PUBLIC SAFETY SHALL NOT BE COMPROMISED AND PROPER SEPARATION SHALL BE MAINTAINED AT ALL TIMES. REFERENCE IS DIRECTED TO "SAFE" SECTION OF THE SPECIFICATIONS. EQUIPMENT AND VEHICLES SHALL BE MARKED WITH 3' X 3' ORANGE AND WHITE CHECKER FLAGS (DAY ONLY) OR YELLOW FLASHING DOME TYPE LIGHT (DAY OR NIGHT).
2. THE CONTRACTOR SHALL LOCATE AND PROTECT EXISTING UTILITIES AND FACILITIES (I.E., AIRPORT LIGHTING, NAVAIDS, ETC.) FROM DAMAGE BY EQUIPMENT OR PERSONNEL. THE CONTRACTOR SHALL CONTACT ALL UTILITY AND FACILITY AGENCIES FOR FIELD MARKING PRIOR TO BEGINNING CONSTRUCTION. THE LOCATIONS OF EXISTING UNDERGROUND UTILITIES ARE SHOWN IN AN APPROXIMATE WAY ONLY AND HAVE NOT BEEN INDEPENDENTLY VERIFIED BY THE OWNER OR ITS REPRESENTATIVE. THE CONTRACTOR SHALL DETERMINE THE EXACT LOCATION OF ALL EXISTING UTILITIES BEFORE COMMENCING WORK, AND AGREES TO BE FULLY RESPONSIBLE FOR ANY AND ALL DAMAGES WHICH MIGHT BE OCCASIONED BY THE UNDERGROUND UTILITIES. ALL UTILITIES AND FACILITIES ARE NOT NECESSARILY SHOWN. THE CONTRACTOR SHALL ADVISE THE ENGINEER, IN WRITING, OF ANY EXISTING DAMAGED UTILITIES PRIOR TO BEGINNING CONSTRUCTION. ANY UTILITIES OR FACILITIES DAMAGED DURING THE PROJECT BY THE CONTRACTOR'S MEN OR EQUIPMENT SHALL BE PROMPTLY REPAIRED OR REPLACED AT THE CONTRACTOR'S EXPENSE. HAND DIGGING TO PROTECT UTILITIES FROM DAMAGE SHOULD BE ANTICIPATED.
3. THE CONTRACTOR SHALL BE RESPONSIBLE FOR OBTAINING ALL PERMITS, LICENSES, ETC. REQUIRED BY LOCAL, STATE AND FEDERAL AGENCIES.
4. THE CONTRACTOR SHALL NEVER ENTER AN ACTIVE RUNWAY SAFETY AREA DURING THIS PROJECT. FOR WORK INSIDE A TAXIWAY SAFETY AREA SEE CONSTRUCTION, SAFETY, & PHASING PLAN.
5. THE CONTRACTOR IS ADVISED THAT AIRCRAFT MAINTENANCE OPERATIONS ARE CONDUCTED ADJACENT TO THE PROJECT. SPECIAL ATTENTION TO DUST CONTROL WILL BE REQUIRED DURING THE COURSE OF THE PROJECT. THE USE OF WATER AND CALCIUM CHLORIDE SHALL BE ANTICIPATED. THE ENGINEER RESERVES THE RIGHT TO HALT WORK OR HAULING IN NON-CONFORMING AREAS, IF CORRECTIVE ACTIONS ARE NOT PROMPTLY TAKEN BY THE CONTRACTOR TO CONTROL DUST.
6. AN ELECTRONIC FILE OF THE PLANS MAY BE OBTAINED BY THE CONTRACTOR TO AID IN THE PROJECT LAYOUT AND GRADING ONCE THE PROJECT HAS BEEN AWARDED.
7. ALL DEMOLISHED MATERIAL IS TO BE DISPOSED OF OFFSITE BY THE CONTRACTOR AT HIS/HER EXPENSE, UNLESS OWNER SPECIFICALLY REQUESTS TO KEEP ANY REMOVED MATERIAL.
8. ANY DISCREPANCIES IN THE SITE CONTROL INFORMATION SHALL BE IMMEDIATELY BROUGHT TO THE ATTENTION OF THE ENGINEER FOR RESOLUTION PRIOR TO ANY WORK PERFORMED.
9. THE CONTRACTOR SHALL BE HELD RESPONSIBLE FOR HAVING VISITED THE SITE AND HAVING FAMILIARIZED HIMSELF WITH EXISTING CONDITIONS PRIOR TO SUBMITTING HIS BID.
10. UNLESS DIRECTED OTHERWISE BY OWNER, CONTRACTOR WILL NOT BE ALLOWED TO USE ANY OF THE EXISTING TAXIWAYS OR APRON AS PART OF THE STOCKPILE/STORAGE AREA.
11. THE CONTRACTOR SHALL COORDINATE WITH AIRPORT MANAGEMENT FOR NECESSARY SECURITY FENCE INSTALLATION AND REMOVAL. CONTRACTOR SHALL MAINTAIN FULL PERIMETER FENCING AT ALL TIMES. NEW OR TEMPORARY FENCE MUST BE INSTALLED PRIOR TO EXISTING FENCE REMOVAL TO MAINTAIN SECURED AREA.
12. AREAS OUTSIDE THE PROJECT LIMITS ARE DESIGNATED AS RESTRICTED AREAS. THE CONTRACTOR'S FORCES ARE PROHIBITED FROM ENTERING RESTRICTED AREAS AT ANY TIME, UNLESS SPECIFICALLY AUTHORIZED BY THE ENGINEER OR AIRPORT MANAGEMENT.
13. ALL WORK WITHIN THE RIGHT-OF-WAY OF AIRPORT ROAD SHALL FOLLOW THE REQUIREMENTS OF DIVISION 600 "MAINTENANCE AND CONTROL OF TRAFFIC" OF THE SCDOT STANDARD SPECIFICATIONS.

SEE CSPP FOR STOCKPILE & MATERIAL STORAGE LOCATION

UTILITY PROVIDERS

WATER – CITY OF NEWBERRY
1330 COLLEGE STREET
NEWBERRY, SC 29108
(803) 321-1018

SEWER – CITY OF NEWBERRY
1330 COLLEGE STREET
NEWBERRY, SC 29108
(803) 321-1018

POWER – NEWBERRY ELECTRIC COOP
882 WILSON ROAD
NEWBERRY, SC 29108
(803) 276-1121

TELEPHONE - AT&T

LEGEND

- PROPERTY LINE
- EXISTING POWER LINE
- EXISTING MAJOR CONTOUR
- EXISTING MINOR CONTOUR
- EXISTING CHAIN-LINK FENCE
- EXISTING TELEPHONE
- EXISTING TSA
- EXISTING SEWER LINE
- EXISTING WATER LINE
- EXISTING STORM DRAINAGE
- EXISTING POWER POLE
- EXISTING CONTROL POINT
- EXISTING BUILDING
- EXISTING PAVEMENT/GRAVEL (TO BE REMOVED)
- EXISTING CONCRETE
- EXISTING SIGN

PALMETTO UTILITY PROTECTION SERVICE
DIAL 811
CALL BEFORE YOU DIG!

0 20 40 60 80
GRAPHIC SCALE IN FEET
SCALE: 1"=20'

NEWBERRY COUNTY AIRPORT
1139 AIRPORT ROAD
NEWBERRY, SC 29108

TERMINAL RENOVATION & EXPANSION

SOUTH CAROLINA REGISTERED No. 22237 J. ANDREW SINGER 5/1/18

SOUTH CAROLINA CERTIFICATE OF AUTHORIZATION TALBERT, BRIGHT & ELLINGTON COA-4350

ARCHITECT

THE WILSON GROUP
P O BOX 5510
CHARLOTTE, NC 28299
(704) 331-9747

PROJECT MANAGER | CIVIL ENGINEER
TALBERT, BRIGHT & ELLINGTON
2000 PARK STREET, SUITE 101
COLUMBIA, SC 29201
(803) 933-9290

STRUCTURAL ENGINEER
STEWART
200 S. COLLEGE ST, SUITE 720
CHARLOTTE, NC 28202
(704) 334-7925

MECHANICAL, ELECTRICAL, PLUMBING & FIRE PROTECTION ENGINEER
SABER ENGINEERING
2923 SOUTH TRYON STREET, SUITE 280
CHARLOTTE, NC 28203
(704) 373-0068

REVISIONS

DATE	2018-04-11
PROJECT NUMBER	3309-1701
SHEET TITLE	

EXISTING CONDITIONS

SHEET NUMBER

C-02

Point Table			
Point #	Northing	Easting	Description
1	902047.16	1807899.86	Radius
2	902008.31	1807865.29	Radius
3	902033.86	1807914.80	3
4	902032.26	1807886.51	4
5	901995.02	1807880.23	5
6	902023.21	1807878.64	6
7	902088.09	1807824.22	7
8	902102.98	1807837.56	8
9	902115.76	1807822.18	9
10	902164.85	1807862.95	10
11	902162.93	1807865.25	Radius
12	902163.97	1807868.07	12
13	902146.86	1807874.39	13
14	902178.84	1807900.95	14
15	902199.20	1807893.43	15
16	902200.24	1807896.24	Radius
17	902202.16	1807893.93	17
18	902203.61	1807895.14	18

Point Table			
Point #	Northing	Easting	Description
19	902184.44	1807918.22	Radius
20	902209.57	1807934.62	20
21	902165.68	1808001.85	21
22	902148.93	1807990.92	Radius
23	902135.63	1808005.86	23
24	902175.28	1808040.09	24
25	902171.90	1808014.28	25
26	902188.64	1808025.21	Radius
27	902218.11	1807943.48	27
28	902256.03	1807932.75	28
29	902243.23	1807959.88	Radius
30	902275.42	1807941.89	30
31	902281.39	1807929.23	31
32	902230.79	1807905.37	32
33	902221.90	1807897.10	33
34	902239.32	1807887.28	Radius
35	902211.92	1807885.14	35
36	902189.91	1807866.86	36
37	902188.87	1807864.05	37
38	902192.53	1807842.65	38

Point Table			
Point #	Northing	Easting	Description
39	902156.11	1807812.40	39
40	902153.03	1807830.39	40
41	902148.16	1807832.19	41
42	902150.08	1807829.88	Radius
43	902118.20	1807807.30	43
44	902111.12	1807794.29	44
45	902130.98	1807791.92	45
46	902102.27	1807776.36	46
47	902081.33	1807797.84	Radius
48	902085.29	1807759.81	48
49	902076.72	1807769.61	49
50	902090.01	1807782.56	50
51	902090.71	1807803.31	51
52	902079.54	1807793.30	Radius

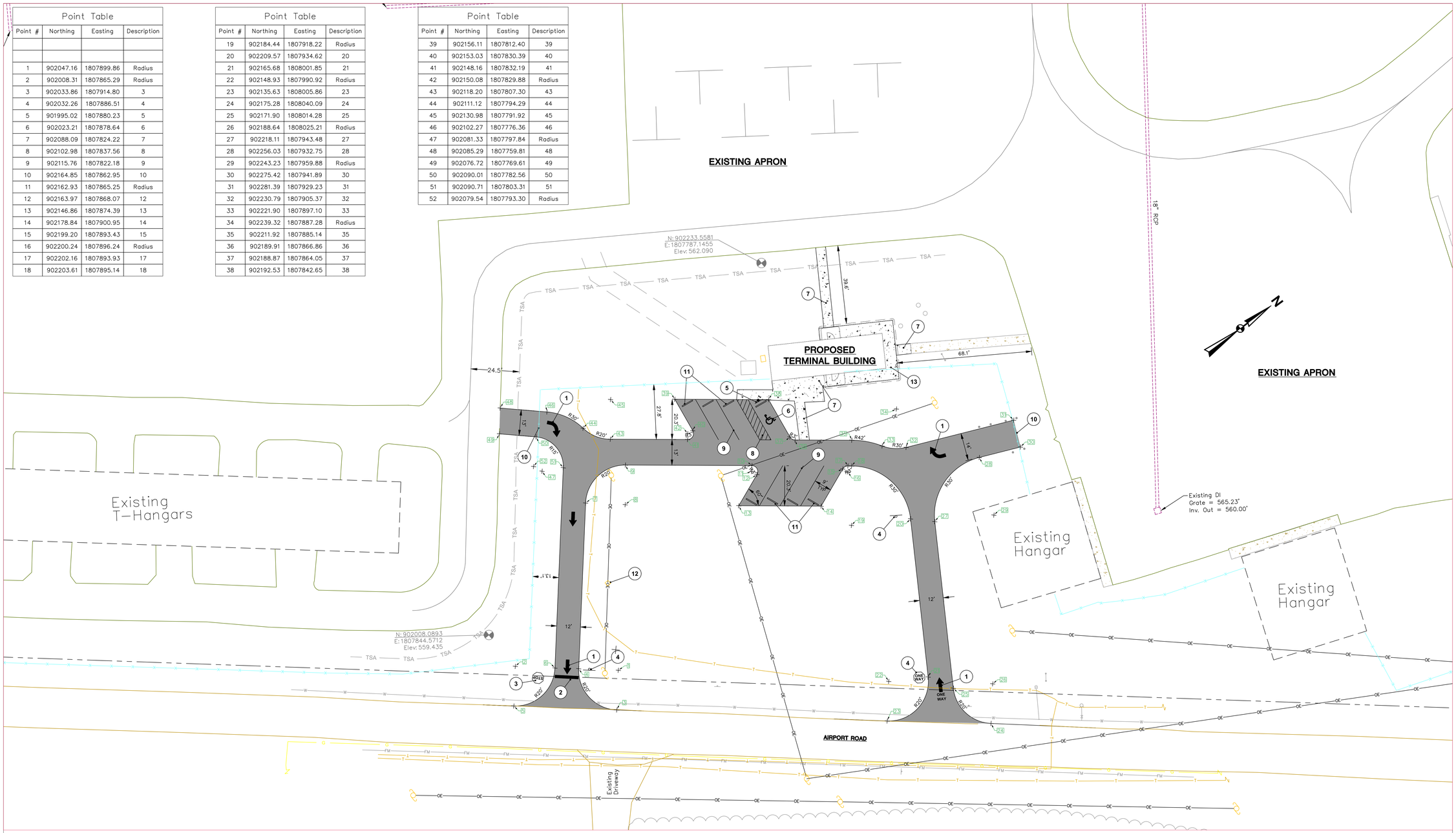

GENERAL NOTES:

1. ALL CONSTRUCTION SHALL BE IN ACCORDANCE WITH THE LATEST STANDARDS IN EFFECT AT THE TIME OF BIDDING THAT ARE REQUIRED BY THE FEDERAL AVIATION ADMINISTRATION (FAA), AND/OR SCDHEC AND/OR SCDOT AND SHALL ADHERE TO THE MORE STRINGENT STANDARDS.
2. THE CONTRACTOR SHALL PROTECT EXISTING NAVAIDS AND CRITICAL AREAS ON THIS SITE THAT ARE NOT SHOWN TO BE REMOVED.
3. ALL DIMENSIONS ARE EDGE OF PAVEMENT TO EDGE OF PAVEMENT.
4. THE LOCATION OF UTILITIES INDICATED ARE REPRESENTATIVE OF THOSE TO BE ENCOUNTERED IN THE CONSTRUCTION. IT SHALL BE THE CONTRACTOR'S RESPONSIBILITY TO DETERMINE THE ACTUAL LOCATION OF ALL SUCH FACILITIES INCLUDING HOMERUN CABLES AND SERVICE CONNECTIONS TO UNDERGROUND UTILITIES. PRIOR TO CONSTRUCTION. IN THE EVENT AN UNEXPECTED UTILITY INTERFERENCE IS ENCOUNTERED DURING CONSTRUCTION, THE CONTRACTOR SHALL IMMEDIATELY NOTIFY THE ENGINEER. ANY SUCH SERVICES DISTURBED BY THE CONTRACTOR'S OPERATION SHALL BE RESTORED IMMEDIATELY AT THE CONTRACTOR'S EXPENSE.
5. THE CONTRACTOR SHALL COORDINATE WITH THE AIRPORT MANAGER CONCERNING OPERATION, RELOCATIONS AND SHUTDOWNS OF ANY FACILITIES DURING PROJECT CONSTRUCTION.
6. THE CONTRACTOR SHALL BE RESPONSIBLE TO LOCATE ALL EXISTING CIRCUITS WITHIN THE PROJECT AREA AND CONFIRM THE WIRE TYPE AND SIZE. THE ENGINEER SHALL BE NOTIFIED OF ANY DISCREPANCIES AS SOON AS POSSIBLE.
7. ALL PARKING LOT STRIPING SHOWN SHALL BE PERFORMED BY THE CONTRACTOR USING WHITE TRAFFIC MARKING PAINT UNLESS NOTED OTHERWISE. PAINT SHALL BE FS-TT-P-1952 (WATERBORNE) COLOR, WHITE OR AS OTHERWISE NOTED. TRAFFIC PAINT SHALL BE APPLIED IN TWO COATS AND IN STRICT ACCORDANCE WITH THE MANUFACTURER'S INSTRUCTIONS.
8. ITEMS TO BE PAINTED WHITE INCLUDE: PARKING STALLS, NON-ACCESSIBLE STRIPED ISLANDS, DIRECTIONAL ARROWS OF SIZE AND LOCATION INDICATED AND STOP BARS.
9. ITEMS TO BE PAINTED BLUE INCLUDE HANDICAP PARKING SYMBOLS AND ACCESSIBLE ISLANDS.
10. THE CONTRACTOR SHALL FURNISH AND INSTALL HANDICAPPED PARKING SIGNS WITH IDENTIFYING HANDICAP SYMBOL AT ALL HANDICAP PARKING SPACES.
11. THE CONTRACTOR SHALL FURNISH AND INSTALL "STOP" SIGNS IN THE LOCATIONS INDICATED. "STOP" SIGNS SHALL BE 30"X30" WITH RED REFLECTORIZED BACKGROUND AND WHITE REFLECTORIZED LEGEND AND BORDER CONFORMING TO SCDOT SPECIFICATIONS.

LEGEND

- (#) CODED NOTE
- CONTROL POINT
- EXISTING CHAIN-LINK FENCE
- PROPOSED CHAIN-LINK FENCE
- TSA — EXISTING TSA
- PROPOSED SIGN
- PROPOSED SCDOT TYPE 1 ASPHALT PAVEMENT

NEWBERRY COUNTY AIRPORT

PARCEL NO. 284-2-7
BII FACILITY
CRITICAL AIRCRAFT = FALCON 20
PROPERTY = 187.3 ACRES

BUILDING AREA = 1004 SF
REGULAR PARKING SPACES = 7
HANDICAP SPACES = 1
TOTAL PARKING SPACES = 8

0 20 40 60 80
GRAPHIC SCALE IN FEET
SCALE: 1"=20'

CODED NOTES:

1. PAINTED (WHITE) TRAFFIC DIRECTIONAL FLOW ARROW (SEE DETAILS AND STRIPING NOTES).
2. PAINTED (WHITE) 18" WIDE WHITE STOP BAR.
3. SCDOT STANDARD STOP SIGN AND POST.
4. SCDOT STANDARD ONE WAY OR DO NOT ENTER SIGN. SEE DETAILS.
5. ACCESSIBLE SIGNAGE (TYPICAL ALL ACCESSIBLE STALLS). SEE DETAILS.
6. PAINTED ACCESSIBLE SYMBOL (SEE DETAILS); TYPICAL ALL ACCESSIBLE SPACES. (PROVIDE 1 SPACE DENOTED AS VAN ACCESSIBLE AS SHOWN)
7. NEW CONCRETE SIDEWALK (SEE DETAIL)
8. 4" WIDE PAINTED BLUE ACCESSIBLE STRIPING @ 45° AND 2' ON CENTER. ALSO STRIPE ACCESSIBLE PARKING STALL LINES USING BLUE PAINT.
9. 4" WIDE PAINTED (WHITE) PARKING LOT STRIPING (TYPICAL).
10. EXISTING ACCESS GATE.
11. PRECAST CONCRETE WHEEL STOP (SEE DETAIL).
12. EXISTING NDB SHALL BE PROTECTED DURING THE ENTIRE PROJECT. CONTRACTOR SHALL AT A MINIMUM PROVIDE ORANGE SAFETY FENCING.
13. CONTRACTOR SHALL REUSE EX. PEDESTRIAN GATE. IF GATE IS DAMAGED DURING CONSTRUCTION, CONTRACTOR SHALL REPLACE AT NO COST TO THE OWNER.

PALMETTO UTILITY PROTECTION SERVICE
DIAL 811
CALL BEFORE YOU DIG

NEWBERRY COUNTY AIRPORT
1139 AIRPORT ROAD
NEWBERRY, SC 29108

TERMINAL RENOVATION & EXPANSION

SOUTH CAROLINA REGISTERED PROFESSIONAL ENGINEER No. 12232 5/1/18 J. ANDREW SINGER

SOUTH CAROLINA CERTIFICATE OF AUTHORIZATION TALBERT, BRIGHT & ELLINGTON COA-4350

ARCHITECT

THE WILSON GROUP
P O BOX 5510
CHARLOTTE, NC 28299
(704) 331-9747

PROJECT MANAGER | CIVIL ENGINEER
TALBERT, BRIGHT & ELLINGTON
2000 PARK STREET, SUITE 101
COLUMBIA, SC 29201
(803) 933-9290

STRUCTURAL ENGINEER
STEWART
200 S. COLLEGE ST, SUITE 720
CHARLOTTE, NC 28202
(704) 334-7925

MECHANICAL, ELECTRICAL, PLUMBING & FIRE PROTECTION ENGINEER
SABER ENGINEERING
2923 SOUTH TRYON STREET, SUITE 280
CHARLOTTE, NC 28203
(704) 373-0068

REVISIONS

DATE	2018-04-11
PROJECT NUMBER	3309-1701
SHEET TITLE	

SITE LAYOUT PLAN

SHEET NUMBER

C-03

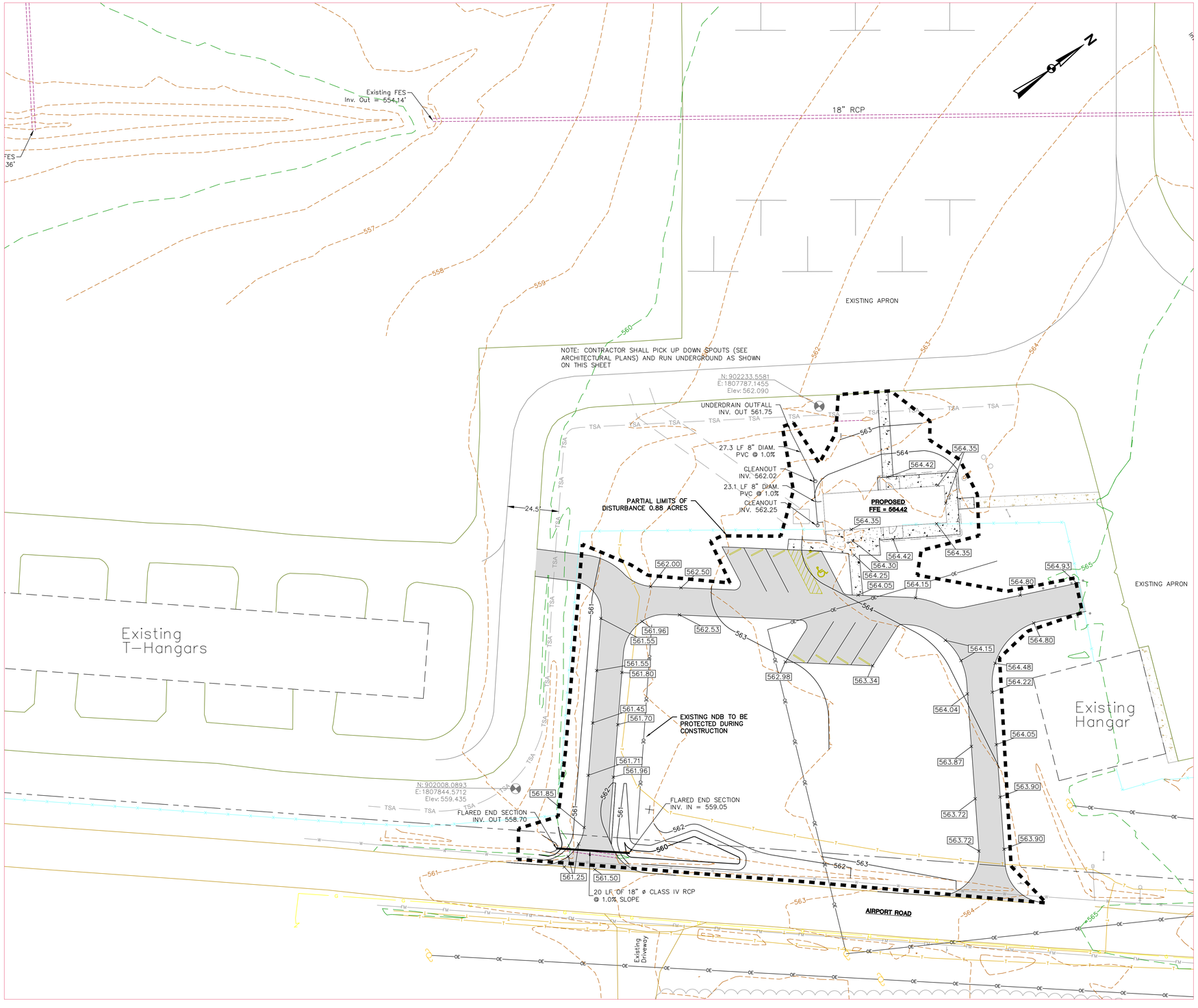

LEGEND

- PROPERTY LINE
- CONTROL POINT
- EXISTING MAJOR CONTOUR
- EXISTING MINOR CONTOUR
- EX. CHAIN-LINK FENCE
- EX. FORCE MAIN
- EX. TELEPHONE
- EX. OVERHEAD ELECTRIC
- EX. TAXIWAY SAFETY AREA
- EXISTING POWER POLE
- PROPOSED DRAINAGE PIPE (RCP)
- PROPOSED LIMITS OF DISTURBANCE
- PROPOSED MAJOR CONTOUR
- PROPOSED MINOR CONTOUR
- PROPOSED CONCRETE
- PROPOSED ASPHALT PAVEMENT

NOTE: CONTRACTOR SHALL PICK UP DOWN SPOUTS (SEE ARCHITECTURAL PLANS) AND RUN UNDERGROUND AS SHOWN ON THIS SHEET

0 20 40 60 80
GRAPHIC SCALE IN FEET
SCALE: 1"=20'

PALMETTO UTILITY PROTECTION SERVICE
DIAL 811
CALL BEFORE YOU DIG

NEWBERRY COUNTY AIRPORT
1139 AIRPORT ROAD
NEWBERRY, SC 29108

TERMINAL RENOVATION & EXPANSION

SOUTH CAROLINA PROFESSIONAL ENGINEER No. 22237 5/1/18 J. ANDREW SHOUP

SOUTH CAROLINA CERTIFICATE OF AUTHORIZATION TALBERT, BRIGHT & ELLINGTON COA-4350

ARCHITECT

THE WILSON GROUP
P O BOX 5510
CHARLOTTE, NC 28299
(704) 331-9747

PROJECT MANAGER | CIVIL ENGINEER

TALBERT, BRIGHT & ELLINGTON
2000 PARK STREET, SUITE 101
COLUMBIA, SC 29201
(803) 933-9290

STRUCTURAL ENGINEER

STEWART
200 S. COLLEGE ST, SUITE 720
CHARLOTTE, NC 28202
(704) 334-7925

MECHANICAL, ELECTRICAL, PLUMBING & FIRE PROTECTION ENGINEER

SABER ENGINEERING
2923 SOUTH TRYON STREET, SUITE 280
CHARLOTTE, NC 28203
(704) 373-0068

REVISIONS

DATE	2018-04-11
PROJECT NUMBER	3309-1701

SHEET TITLE

GRADING & DRAINAGE PLAN

SHEET NUMBER

C-04

SCDHEC SEDIMENT & EROSION CONTROL NOTES

1. IF NECESSARY, SLOPES, WHICH EXCEED EIGHT (8) VERTICAL FEET SHOULD BE STABILIZED WITH SYNTHETIC OR VEGETATIVE MATS, IN ADDITION TO HYDROSEEDING. IT MAY BE NECESSARY TO INSTALL TEMPORARY SLOPE DRAINS DURING CONSTRUCTION. TEMPORARY BERMS MAY BE NEEDED UNTIL THE SLOPE IS BROUGHT TO GRADE.
2. STABILIZATION MEASURES SHALL BE INITIATED AS SOON AS PRACTICABLE IN PORTIONS OF THE SITE WHERE CONSTRUCTION ACTIVITIES HAVE TEMPORARILY OR PERMANENTLY CEASED, BUT IN NO CASE MORE THAN FOURTEEN (14) DAYS AFTER WORK HAS CEASED, EXCEPT AS STATED BELOW. WHERE STABILIZATION BY THE 14TH DAY IS PRECLUDED BY SNOW COVER OR FROZEN GROUND CONDITIONS STABILIZATION MEASURES MUST BE INITIATED AS SOON AS PRACTICABLE. WHERE CONSTRUCTION ACTIVITY ON A PORTION OF THE SITE IS TEMPORARILY CEASED, AND EARTH DISTURBING ACTIVITIES WILL BE RESUMED WITHIN 14 DAYS, TEMPORARY STABILIZATION MEASURES DO NOT HAVE TO BE INITIATED ON THAT PORTION OF THE SITE.
3. ALL SEDIMENT AND EROSION CONTROL DEVICES SHALL BE INSPECTED ONCE EVERY CALENDAR WEEK. IF PERIODIC INSPECTION OR OTHER INFORMATION INDICATES THAT A BMP HAS BEEN INAPPROPRIATELY OR INCORRECTLY INSTALLED, THE PERMITTEE MUST ADDRESS THE NECESSARY REPLACEMENT OR MODIFICATION REQUIRED TO CORRECT THE BMP WITHIN 48 HOURS OF IDENTIFICATION.
4. PROVIDE SILT FENCE AND/OR OTHER CONTROL DEVICES, AS MAY BE REQUIRED, TO CONTROL SOIL EROSION DURING UTILITY CONSTRUCTION. ALL DISTURBED AREAS SHALL BE CLEANED, GRADED, AND STABILIZED WITH GRASSING IMMEDIATELY AFTER THE UTILITY INSTALLATION. FILL, COVER, AND TEMPORARY SEEDING AT THE END OF EACH DAY ARE RECOMMENDED. IF WATER IS ENCOUNTERED WHILE TRENCHING, THE WATER SHOULD BE FILTERED TO REMOVE SEDIMENT BEFORE BEING PUMPED BACK INTO ANY WATERS OF THE STATE.
5. ALL EROSION CONTROL DEVICES SHALL BE PROPERLY MAINTAINED DURING ALL PHASES OF CONSTRUCTION UNTIL THE COMPLETION OF ALL CONSTRUCTION ACTIVITIES AND ALL DISTURBED AREAS HAVE BEEN STABILIZED. ADDITIONAL CONTROL DEVICES MAY BE REQUIRED DURING CONSTRUCTION IN ORDER TO CONTROL EROSION AND/OR OFFSITE SEDIMENTATION. ALL TEMPORARY CONTROL DEVICES SHALL BE REMOVED ONCE CONSTRUCTION IS COMPLETE AND THE SITE IS STABILIZED.
6. THE CONTRACTOR MUST TAKE NECESSARY ACTION TO MINIMIZE THE TRACKING OF MUD ONTO PAVED ROADWAY(S) FROM CONSTRUCTION AREAS AND THE GENERATION OF DUST. THE CONTRACTOR SHALL DAILY REMOVE MUD/SOIL FROM PAVEMENT, AS MAY BE REQUIRED.
7. RESIDENTIAL SUBDIVISIONS REQUIRE EROSION CONTROL FEATURES FOR INFRASTRUCTURE AS WELL AS FOR INDIVIDUAL LOT CONSTRUCTION. INDIVIDUAL PROPERTY OWNERS SHALL FOLLOW THESE PLANS DURING CONSTRUCTION OR OBTAIN APPROVAL OF AN INDIVIDUAL PLAN IN ACCORDANCE WITH S.C REG. 72–300 ET SEQ. AND SCR100000.
8. TEMPORARY DIVERSION BERMS AND/OR DITCHES WILL BE PROVIDED AS NEEDED DURING CONSTRUCTION TO PROTECT WORK AREAS FROM UPSLOPE RUNOFF AND/OR TO DIVERT SEDIMENT –LADEN WATER TO APPROPRIATE TRAPS OR STABLE OUTLETS.
9. ALL WATERS OF THE STATE (WOS), INCLUDING WETLANDS, ARE TO BE FLAGGED OR OTHERWISE CLEARLY MARKED IN THE FIELD. A DOUBLE ROW OF SILT FENCE IS TO BE INSTALLED IN ALL AREAS WHERE A 50–FOOT BUFFER CAN'T BE MAINTAINED BETWEEN THE DISTURBED AREA AND ALL WOS. A 10–FOOT BUFFER SHOULD BE MAINTAINED BETWEEN THE LAST ROW OF SILT FENCE AND ALL WOS.
10. LITTER, CONSTRUCTION DEBRIS, OILS, FUELS, AND BUILDING PRODUCTS WITH SIGNIFICANT POTENTIAL FOR IMPACT (SUCH AS STOCKPILES OF FRESHLY TREATED LUMBER) AND CONSTRUCTION CHEMICALS THAT COULD BE EXPOSED TO STORM WATER MUST BE PREVENTED FROM BECOMING A POLLUTANT SOURCE IN STORM WATER DISCHARGES.
11. A COPY OF THE SWPPP, INSPECTIONS RECORDS, AND RAINFALL DATA MUST BE RETAINED AT THE CONSTRUCTION SITE OR A NEARBY LOCATION EASILY ACCESSIBLE DURING NORMAL BUSINESS HOURS, FROM THE DATE OF COMMENCEMENT.
12. INITIATE STABILIZATION MEASURES ON ANY EXPOSED STEEP SLOPE (3H:1V OR GREATER) WHERE LAND–DISTURBING ACTIVITIES HAVE PERMANENTLY OR TEMPORARILY CEASED, AND WILL NOT RESUME FOR A PERIOD OF 7 CALENDAR DAYS.
13. MINIMIZE SOIL COMPACTION AND, UNLESS INFEASIBLE, PRESERVE TOPSOIL.
14. MINIMIZE THE DISCHARGE OF POLLUTANTS FROM EQUIPMENT AND VEHICLE WASHING, WHEEL WASH WATER, AND OTHER WASH WATERS. WASH WATERS MUST BE TREATED IN A SEDIMENT BASIN OR ALTERNATIVE CONTROL THAT PROVIDES EQUIVALENT OR BETTER TREATMENT PRIOR TO DISCHARGE;
15. MINIMIZE THE DISCHARGE OF POLLUTANTS FROM DEWATERING OF TRENCHES AND EXCAVATED AREAS. THESE DISCHARGES ARE TO BE ROUTED THROUGH APPROPRIATE BMPS (SEDIMENT BASIN, FILTER BAG, ETC.).
16. THE FOLLOWING DISCHARGES FROM SITES ARE PROHIBITED: WASTEWATER FROM WASHOUT OF CONCRETE, UNLESS MANAGED BY AN APPROPRIATE CONTROL; WASTEWATER FROM WASHOUT AND CLEANOUT OF STUCCO, PAINT, FORM RELEASE OILS, CURING COMPOUNDS AND OTHER CONSTRUCTION MATERIALS; FUELS, OILS, OR OTHER POLLUTANTS USED IN VEHICLE AND EQUIPMENT OPERATION AND MAINTENANCE; AND SOAPS OR SOLVENTS USED IN VEHICLE AND EQUIPMENT WASHING.
17. AFTER CONSTRUCTION ACTIVITIES BEGIN, INSPECTIONS MUST BE CONDUCTED AT A MINIMUM OF AT LEAST ONCE EVERY CALENDAR WEEK AND MUST BE CONDUCTED UNTIL FINAL STABILIZATION IS REACHED ON ALL AREAS OF THE CONSTRUCTION SITE.
18. IF EXISTING BMPS NEED TO BE MODIFIED OR IF ADDITIONAL BMPS ARE NECESSARY TO COMPLY WITH THE REQUIREMENTS OF THIS PERMIT AND/OR SC'S WATER QUALITY STANDARDS, IMPLEMENTATION MUST BE COMPLETED BEFORE THE NEXT STORM EVENT WHENEVER PRACTICABLE. IF IMPLEMENTATION BEFORE THE NEXT STORM EVENT IS IMPRACTICABLE, THE SITUATION MUST BE DOCUMENTED IN THE SWPPP AND ALTERNATIVE BMPS MUST BE IMPLEMENTED AS SOON AS REASONABLY POSSIBLE.
19. A PRE–CONSTRUCTION CONFERENCE MUST BE HELD FOR EACH CONSTRUCTION SITE WITH AN APPROVED ON–SITE SWPPP PRIOR TO THE IMPLEMENTATION OF CONSTRUCTION ACTIVITIES. FOR NON–LINEAR PROJECTS THAT DISTURB 10 ACRES OR MORE THIS CONFERENCE MUST BE HELD ON–SITE UNLESS THE DEPARTMENT HAS APPROVED OTHERWISE.

SEQUENCE OF CONSTRUCTION

1. THIS SEQUENCE IS FOR THE INSTALLATION OF SEDIMENT AND EROSION CONTROL.
2. NO LAND DISTURBANCE SHALL TAKE PLACE UNTIL NPDES COVERAGE IS RECEIVED FROM SCDHEC.
3. ON–SITE PRE–CONSTRUCTION MEETING
4. INSTALLATION OF PERIMETER SEDIMENT & EROSION CONTROL (INCL. CONSTRUCTION ENTRANCE)
5. GRUBBING OF GRADED AREAS & DEMOLITION.
6. ROUGH GRADING & STORM DRAINAGE INSTALLATION
7. FINISH GRADING
8. PAVING
9. ADDITIONAL BMP'S AS PROGRESS WARRANTS – OUTLET PROTECTION, CHECK DAMS, ETC.
10. FINE GRADING
11. PERMANENT GRASSING
12. REMOVAL OF TEMPORARY SEDIMENT & EROSION CONTROL MEASURES AFTER ENTIRE AREA DISTURBED IS STABILIZED. (NO SEPARATE PAYMENT WILL BE MADE).
13. ENGINEER SUBMIT NOTICE OF TERMINATION TO SCDHEC.

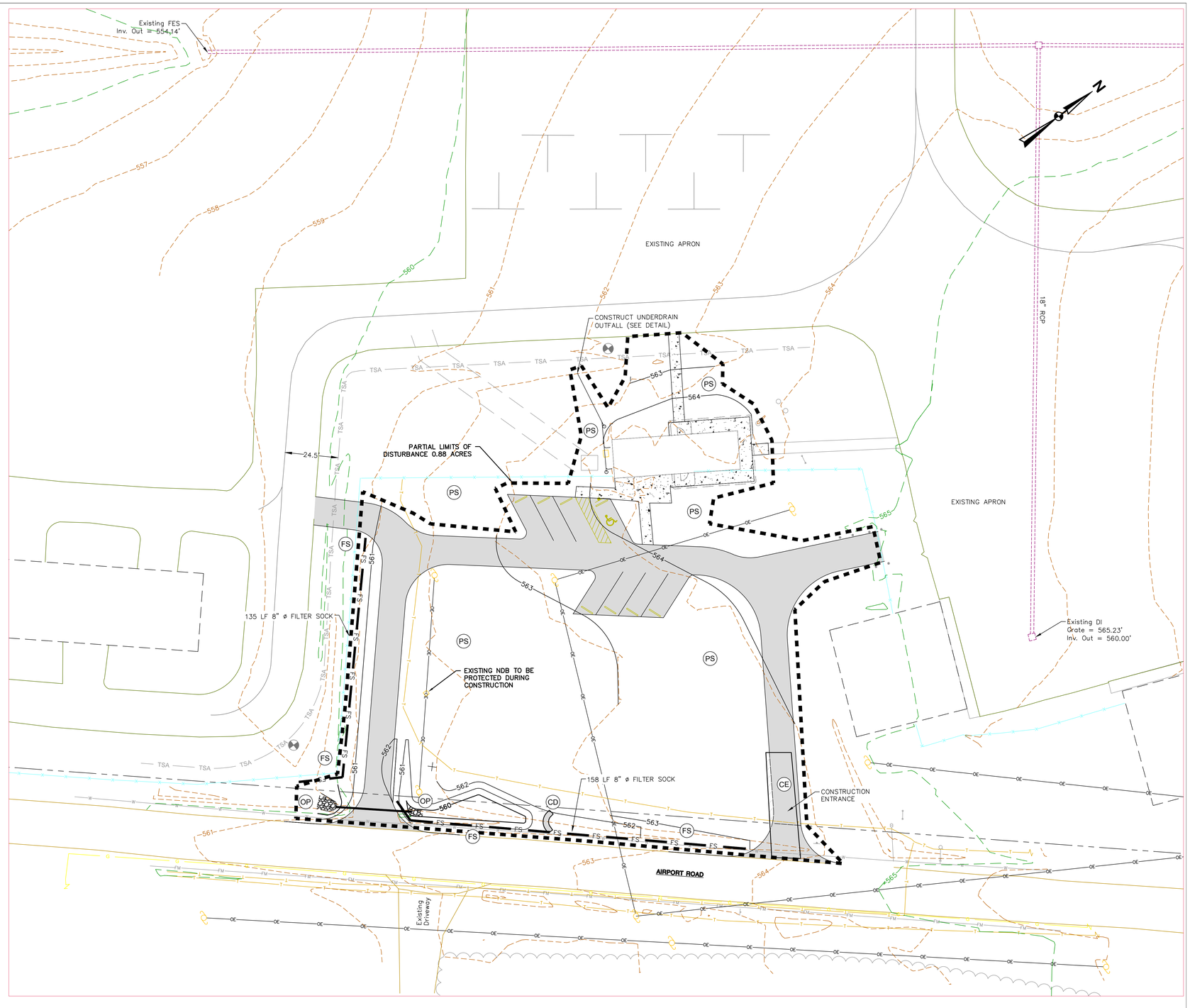

GRAPHIC SCALE IN FEET
SCALE: 1"=20'

LEGEND

- PROPERTY LINE
- CONTROL POINT
- EXISTING MAJOR CONTOUR
- EXISTING MINOR CONTOUR
- EX. CHAIN–LINK FENCE
- EX. FORCE MAIN
- EX. TELEPHONE
- EX. OVERHEAD ELECTRIC
- EX. TAXIWAY SAFETY AREA
- EXISTING POWER POLE
- PROPOSED DRAINAGE PIPE (RCP)
- PROPOSED LIMITS OF DISTURBANCE
- PROPOSED MAJOR CONTOUR
- PROPOSED MINOR CONTOUR
- PROPOSED CONCRETE
- PROPOSED ASPHALT PAVEMENT

EROSION CONTROL LEGEND

- (FS) 8" DIAM. FILTER SOCK — FS —
- (CD) CHECK DAM
- (PS) PERMANENT SEEDING (ALL DISTURBED AREAS)
- (CE) CONSTRUCTION ENTRANCE
- (OP) OUTLET PROTECTION

NEWBERRY COUNTY AIRPORT
1139 AIRPORT ROAD
NEWBERRY, SC 29108

TERMINAL RENOVATION & EXPANSION

SOUTH CAROLINA No. 12237 5/1/18 J. ANDREW SHOUP

SOUTH CAROLINA CERTIFICATE OF AUTHORIZATION TALBERT, BRIGHT & ELLINGTON COA–4350

ARCHITECT

THE WILSON GROUP
P O BOX 5510
CHARLOTTE, NC 28299
(704) 331-9747

PROJECT MANAGER | CIVIL ENGINEER

TALBERT, BRIGHT & ELLINGTON
2000 PARK STREET, SUITE 101
COLUMBIA, SC 29201
(803) 933-9290

STRUCTURAL ENGINEER

STEWART
200 S. COLLEGE ST, SUITE 720
CHARLOTTE, NC 28202
(704) 334-7925

MECHANICAL, ELECTRICAL, PLUMBING & FIRE PROTECTION ENGINEER

SABER ENGINEERING
2923 SOUTH TRYON STREET, SUITE 280
CHARLOTTE, NC 28203
(704) 373-0068

REVISIONS

DATE	2018-04-11
PROJECT NUMBER	3309-1701
SHEET TITLE	

SEDIMENT & EROSION CONTROL PLAN

SHEET NUMBER

C-05

PALMETTO UTILITY PROTECTION SERVICE DIAL 811 CALL BEFORE YOU DIG

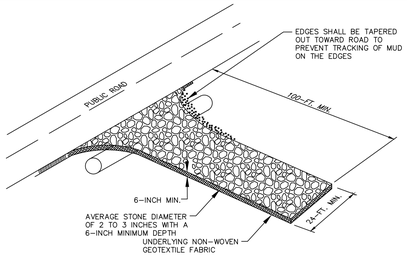

1. INSTALL A CULVERT PIPE ACROSS THE ENTRANCE WHEN NEEDED TO PROVIDE POSITIVE DRAINAGE.
2. DIVERT ALL SURFACE RUNOFF AND DRAINAGE FROM THE STONE PAD TO SEDIMENT TRAPPING STRUCTURE.

WHEN AND WHERE TO USE IT

STABILIZED CONSTRUCTION ENTRANCES SHOULD BE USED AT ALL POINTS WHERE TRAFFIC WILL BE LEAVING A CONSTRUCTION SITE AND MOVING DIRECTLY ONTO A PUBLIC ROAD.

IMPORTANT CONSIDERATIONS

IF WASHING IS USED, PROVISIONS MUST BE MADE TO INTERCEPT THE WASH WATER AND TRAP THE SEDIMENT BEFORE IT IS CARRIED OFFSITE. WASHDOWN FACILITIES SHALL BE REQUIRED AS DIRECTED BY SCDHEC AS NEEDED.
WASHDOWN AREAS IN GENERAL MUST BE ESTABLISHED WITH CRUSHED GRAVEL AND DRAIN INTO A SEDIMENT TRAP OR BASIN.
CONSTRUCTION ENTRANCES SHOULD BE USED IN CONJUNCTION WITH THE STABILIZATION OF CONSTRUCTION ROADS TO REDUCE THE AMOUNT OF MUD PICKED UP BY VEHICLES.

INSTALLATION

REMOVE ALL VEGETATION AND ANY OBJECTIONALABLE MATERIAL FROM THE FOUNDATION AREA. DIVERT ALL SURFACE RUNOFF AND DRAINAGE FROM STONES TO A SEDIMENT TRAP OR BASIN. INSTALL A NON-WOVEN GEOTEXTILE FABRIC PRIOR TO PLACEMENT OF STONE. INSTALL A CULVERT PIPE AS NECESSARY TO PROVIDE POSITIVE DRAINAGE. THE ENTRANCE SHALL CONSIST OF 1-INCH TO 3-INCH D50 STONE PLACED AT A MINIMUM DEPTH OF 6-INCHES WITH MINIMUM DIMENSIONS OF 24-FEET WIDE BY 100-FEET IN LENGTH AND MAY BE MODIFIED TO ACCOMMODATE SITE. THE EDGES OF THE ENTRANCE SHALL BE TAPERED OUT TOWARD THE ROAD TO PREVENT TRACKING OF MUD AT THE EDGE OF THE ENTRANCE.

INSPECTION AND MAINTENANCE

INSPECT ONCE EVERY FOURTEEN (14) CALENDAR DAYS AND WITHIN 24-HOURS OF THE END OF A STORM EVENT OF 0.5 INCHES OR GREATER.
CHECK FOR MUD AND SEDIMENT BUILDUP AND PAD INTEGRITY.
MAKE DAILY INSPECTIONS DURING PERIODS OF WET WEATHER.
MAINTENANCE IS REQUIRED MORE FREQUENTLY IN WET WEATHER CONDITIONS.
RESHAPE THE STONE PAD AS NEEDED FOR DRAINAGE AND RUNOFF CONTROL.
WASH OR REPLACE STONE AS NEEDED AND AS DIRECTED BY THE INSPECTOR. FREQUENT WASHING OF STONE WILL EXTEND THE USEFULL LIFE OF THE STONE.
FLUSHING SHOULD ONLY BE USED WHEN THE WATER IS DISCHARGED TO A SEDIMENT TRAP OR BASIN.
REPAIR ANY BROKEN PAVEMENT IMMEDIATELY.

TEMPORARY CONSTRUCTION ENTRANCE IS INCIDENTAL TO OTHER ITEMS; NO ADDITIONAL PAYMENT WILL BE MADE

TEMPORARY CONSTRUCTION ENTRANCE

NOT TO SCALE

PROPOSED TERMINAL BUILDING

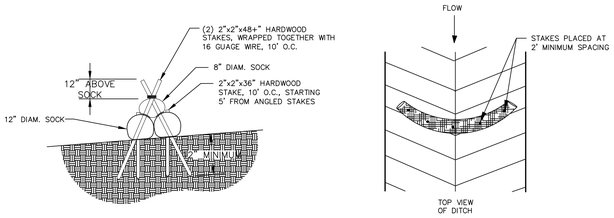

COMPOST FILTER SOCK CHECKDAM DETAIL

NOT TO SCALE

A. RANGE OF PH IS 5.0–8.0 IN ACCORDANCE WITH TMECC 04.11–A, ELECTROMETRIC PH DETERMINATIONS FOR COMPOST.
B. PARTICLE SIZE 99% PASSING A 2–INCH (50MM) SIEVE WITH A RANGE OF 30%–50% PASSING A 3/8–INCH (9.5MM) SIEVE, IN ACCORDANCE WITH TMECC 02.02–B, "SAMPLE SIEVING FOR AGGREGATE SIZE CLASSIFICATION". (NOTE IN THE FIELD, PRODUCT COMMONLY IS BETWEEN ½ INCH AND 2–INCH PARTICLE SIZE.)
C. MESH OPENING SIZE SHALL BE BETWEEN ⅜" AND ⅜".
D. MOISTURE CONTENT OF LESS THAN 60% IN ACCORDANCE WITH STANDARDIZED TEST METHODS FOR MOISTURE DETERMINATION.
E. MATERIAL SHALL BE RELATIVELY FREE (<1% BY DRY WEIGHT) OF INERT OR FOREIGN MAN MADE MATERIALS.
F. A SAMPLE SHALL BE SUBMITTED TO THE ENGINEER FOR APPROVAL PRIOR TO ORDERING AND MUST COMPLY WITH LOCAL, STATE, AND FEDERAL REGULATIONS.
G. EXAMPLES OF MEDIA THAT MAY BE USED INCLUDE UNTREATED AND NON–PAINTED WOOD PALETS, AND CLEAN LAND CLEARING DEBRIS OR TREE CHIPS PROVIDED THEY MEET THE CRITERIA SHOWN ABOVE.

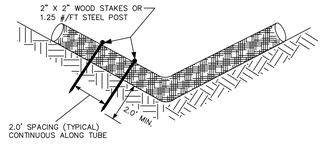

COMPOST FILTER SOCK DETAIL

NOT TO SCALE

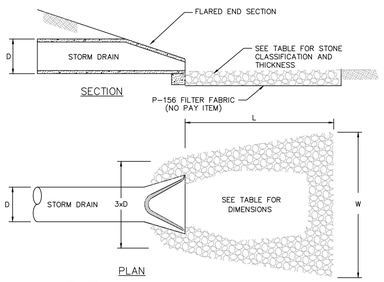

MAINTENANCE:
INSPECT RIPRAP OUTLET STRUCTURES WEEKLY AND AFTER SIGNIFICANT (½ INCH OR GREATER) RAINFALL EVENTS TO SEE IF ANY EROSION AROUND OR BELOW THE RIPRAP HAS TAKEN PLACE, OR IF STONES HAVE BEEN DISLODGED. IMMEDIATELY MAKE ALL NEEDED REPAIRS TO PREVENT FURTHER DAMAGE.

OUTLET					
STR. NO.	PIPE DIA.	L (FT.)	W (FT.)	CLASS STONE	THICK-NESS
18"	18"	10'	11.5'	I	17"

OUTLET PROTECTION DETAIL

NOT TO SCALE

SEEDING NOTES

1. TOPSOIL IS TO BE STRIPPED AND STOCKPILED IN AN AREA DESIGNATED BY THE ENGINEER AND PROTECTED FROM EROSION.
2. GRASS WITHIN THE LIMITS OF CONSTRUCTION SHALL BE STRIPPED AND REMOVED FROM THE SITE.
3. FERTILIZER SHALL BE GRADE 10–10–10 COMPLETE FERTILIZER OF UNIFORM COMPOSITION, FREE–FLOWING AND SUITABLE FOR APPLICATION WITH EQUIPMENT, DELIVERED TO SITE IN BAGS LABELED WITH MANUFACTURER'S GUARANTEE ANALYSIS, AND SHALL CONFORM TO ALL STATE AND FEDERAL REGULATIONS.
4. SEEDS SHALL BE MIXTURE AS APPROVED BY THE ENGINEER AND SHALL MEET REQUIREMENTS OF SEED LAWS OF THE STATE AND THE US DEPARTMENT OF AGRICULTURE RULES AND REGULATIONS UNDER FEDERAL SEED ACT IN EFFECT ON DATE BIDS ARE RECEIVED. SEED SHALL BE DELIVERED IN STANDARD CONTAINER. SEED WHICH HAS BECOME WET, MOLDY, OR DAMAGED IN TRANSIT OR STORAGE WILL NOT BE ACCEPTED.
5. MULCH SHALL FOLLOW SPECIFICATION SECTION T–901 FOR MATERIAL REQUIREMENTS AND APPROVED CONSTRUCTION METHODS.
6. SPREAD LIME AT A RATE OF 3,000 LBS. PER ACRE.
7. FERTILIZER SHALL BE DISTRIBUTED UNIFORMLY AT A RATE OF 1,000 LBS. PER ACRE AND SHALL BE INCORPORATED INTO SOIL TO A DEPTH OF AT LEAST 2" BY DISKING AND HARROWING.
8. SPREAD SEED AT A RATE AS NOTED ON THE DRAWINGS.
9. IMMEDIATELY AFTER FERTILIZING AND SEEDING HAVE BEEN COMPLETED, ENTIRE AREA SHALL BE COMPACTED BY MEANS OF A CULTIPACKER, ROLLER, OR APPROVED EQUIPMENT WEIGHING APPROXIMATELY 90 LBS. PER LINEAR FOOT OF ROLLER. USE OF SPECIFIED MULCH, APPLIED AT A RATE OF 1–2TON/ACRE (USE THE HIGHER RATE FOR 3:1 OR GREATER SLOPES) WITH ASPHALT EMULSION TYPE SS–1, MS–2, RS–1, OR RS–2 SHALL BE USED TO PROTECT SITE AGAINST EROSION.
10. AREAS THAT REQUIRE RE–FERTILIZATION AND/OR RE–SEEDING WILL BE DESIGNATED BY THE ENGINEER. WHEN ANY PORTION OF SURFACE BECOMES GULLED OR OTHERWISE DAMAGED FOLLOWING SEEDING, OR SEEDLINGS HAVE BEEN WINTER–KILLED OR OTHERWISE DESTROYED, AFFECTED PORTION SHALL BE REPAIRED TO RE–ESTABLISH CONDITION AND GRADE OF SOIL PRIOR TO SEEDING AND SHALL BE RE–SEEDED AS SPECIFIED ABOVE.
11. ALL DISTURBED AREAS ARE TO BE GRADED IMMEDIATELY AFTER CONSTRUCTION IN THE AREA, AT NO TIME WILL AN AREA BE LEFT BARE FOR MORE THAN 14 DAYS AFTER COMPLETION OF CONSTRUCTION.
12. PERMANENT GRASS SHALL BE PROVIDED FOR ALL DISTURBED AREAS. SEED SHALL BE A MINIMUM 90% PURITY AND 80% GERMINATION AREAS TO HAVE GRASS APPLIED SHALL BE SCARIFIED CULTIVATED TO A DEPTH OF 3 INCHES, WITH ALL CLODS OR CLUMPS BROKEN UP AND FOREIGN MATERIAL AND DEBRIS REMOVED. FERTILIZER AND LIME SHALL BE THOROUGHLY WORKED INTO THE SOIL, AND THE SURFACE RAKED SMOOTH BEFORE APPLYING SEED. SEED SHALL BE APPLIED EVENLY AT THE MINIMUM RATE AND RAKED IN LIGHTLY. MULCH SHALL BE APPLIED AT THE RATE AS SPECIFIED ABOVE.
13. CONTRACTOR SHALL WATER AS NEEDED UNTIL GRASS IS ESTABLISHED.
14. ALL DISTURBED AREAS SHALL BE HYDRO–SEEDED. THIS INCLUDES AREAS TRENCHED FOR ELECTRICAL.

PERMANENT SEEDING (MULCHED) DETAIL

SEEDING SCHEDULE FOR PERMANENT VEGETATION

SEEDING SCHEDULE FOR PERMANENT VEGETATION UPPER STATE				
SCHEDULE NO.	COMMON NAME OF SEED	POUNDS/ACRE RURAL	POUNDS/ACRE URBAN	PLANTING DATES
1	COMMON BERMUDA (HULLED) [3]	23	23	MARCH 15 TO AUGUST 14
	WEEPING LOVEGRASS [2]	10	10	
	SERICEA LESPEDEZA (SCARIFIED) [2]	50	60	
	KENTUCKY 31 FESCUE	10	10	
2	KENTUCKY 31 FESCUE	50	80	AUGUST 15 TO MARCH 14
	WEEPING LOVEGRASS [2]	10	10	
	SERICEA LESPEDEZA (UNHULLED, UNSCARIFIED) [2]	80	80	
	RESEEDING CRIMSON CLOVER [4]	20	0	
	ANNUAL RYE GRASS [7]	5	15	
	RYE GRAIN	20	0	
	COMMON BERMUDA (unhulled) [3]	30	30	

1. INCLUDES RURAL AREAS ADJACENT TO WELL DEVELOPED LAWNS.
2. NOT REQUIRED ON SHOULDERS, MEDIANS, ETC. AND ON SLOPES UNDER FIVE (5) FEET IN HEIGHT.
3. DO NOT USE GIANT BERMUDA SEED INCLUDING NK–37.
4. INOCULATE RE–SEEDING CRIMSON CLOVER IN ACCORDANCE WITH SUBSECTION 810.2.4 (SCDOT STD. SPECIFICATIONS FOR HWY CONSTRUCTION). DO NOT PLANT CLOVER IN MEDIANS OR IN RURAL AREAS ADJACENT TO WELL DEVELOPED LAWNS.
5. APPLY ONE HALF OF LIME RATES AND ONE HALF OF MAINTENANCE FERTILIZER RATES. FERTILIZER CENTIPEDE AT THE APPLICATION RATE OF 20 POUNDS PER ACRE OF 16–4–8 OR 15–015 FERTILIZERS IN MAY AND REPEAT IN AUGUST.
6. THE USE OF ITALIAN RYE GRASS IS PROHIBITED ON ALL PROJECTS.

SEEDING SCHEDULE FOR TEMPORARY VEGETATION UPPER STATE			
SCHEDULE NO.	COMMON NAME OF SEED	POUNDS/ACRE	PLANTING DATES
1	BROWN TOP MILLET	50	APRIL 1 TO AUGUST 15
2	RYE GRAIN	55	AUGUST 16 TO MARCH 31
	ANNUAL RYEGRASS [1]	15	

1. ADD OAT GRAIN AT THE RATE OF 10 POUNDS PER ACRE TO SCHEDULES IF THE SEEDING DATE IS BETWEEN MARCH 1 AND APRIL 16.

SEEDING SCHEDULE FOR TEMPORARY VEGETATION

NEWBERRY COUNTY AIRPORT
1139 AIRPORT ROAD
NEWBERRY, SC 29108

TERMINAL RENOVATION & EXPANSION

SOUTH CAROLINA PROFESSIONAL ENGINEER No. 22237 ANDREW SINGER 5/1/18

SOUTH CAROLINA CERTIFICATE OF AUTHORIZATION TALBERT, BRIGHT & ELLINGTON COA-4350

ARCHITECT
THE WILSON GROUP
P O BOX 5510
CHARLOTTE, NC 28299
(704) 331-9747

PROJECT MANAGER | CIVIL ENGINEER
TALBERT, BRIGHT & ELLINGTON
2000 PARK STREET, SUITE 101
COLUMBIA, SC 29201
(803) 933-9290

STRUCTURAL ENGINEER
STEWART
200 S. COLLEGE ST, SUITE 720
CHARLOTTE, NC 28202
(704) 334-7925

MECHANICAL, ELECTRICAL, PLUMBING & FIRE PROTECTION ENGINEER
SABER ENGINEERING
2923 SOUTH TRYON STREET, SUITE 280
CHARLOTTE, NC 28203
(704) 373-0068

REVISIONS

DATE	2018-04-11
PROJECT NUMBER	3309-1701

SHEET TITLE
EROSION CONTROL DETAILS

SHEET NUMBER
C-06

PALMETTO UTILITY PROTECTION SERVICE DIAL 811 CALL BEFORE YOU DIG

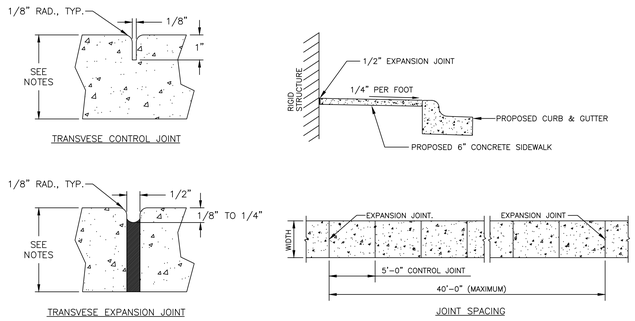

GENERAL NOTES:

1. A GROOVE (CONTROL) JOINT 1" DEEP WITH 1/8" RADII SHALL BE REQUIRED IN THE CONCRETE SIDEWALK AT MAXIMUM 5' INTERVALS.
2. ONE 1/2" EXPANSION JOINT WILL BE REQUIRED AT MAXIMUM 40' INTERVALS AND MATCHING EXPANSION/CONSTRUCTION JOINTS IN ADJACENT CURB. A SEALED 1/2" EXPANSION JOINT WILL BE REQUIRED WHERE THE SIDEWALK JOINS ANY RIGID STRUCTURE.
3. SIDEWALK SHALL BE MINIMUM 6" THICK.
4. SIDEWALK SHALL BE CONSTRUCTED ON ADEQUATELY COMPACTED AND PROPERLY GRADED BASE.
5. SIDEWALK SHALL HAVE MINIMUM 5' WIDTH.
6. CONCRETE SHALL BE MINIMUM 3,000 PSI.

SIDEWALK DETAIL

NOT TO SCALE

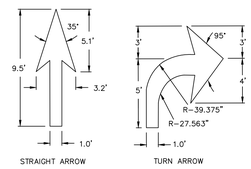

PAVEMENT SYMBOL DETAILS

NOT TO SCALE

STOP BAR MARKING DETAIL

NOT TO SCALE

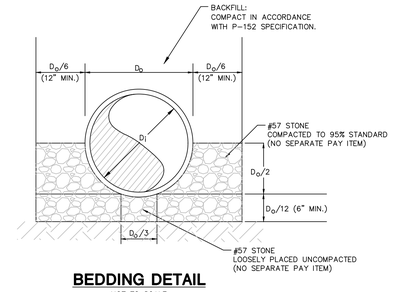

BEDDING DETAIL

NOT TO SCALE

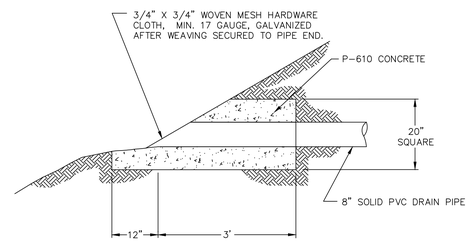

UNDERDRAIN OUTFALL DETAIL

NOT TO SCALE

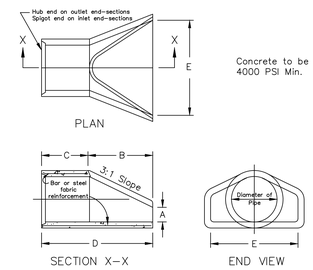

END-SECTION DIMENSIONS					
DIAM.	A	B	C	D	E
18"	9"	2'-3"	1'-9"	4'-0"	3'-0"

CONCRETE FLARED END SECTION

NOT TO SCALE

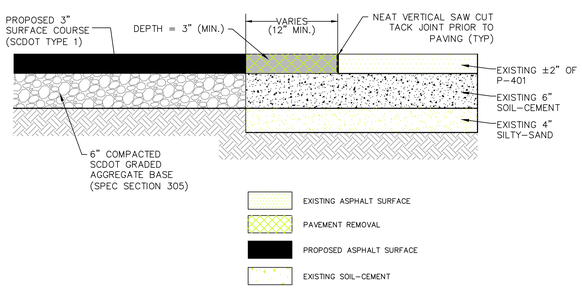

PAVEMENT TIE-IN DETAIL

NOT TO SCALE

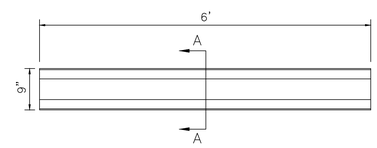

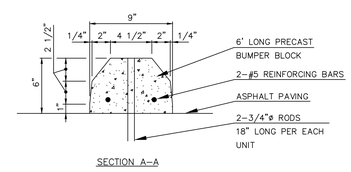

PRECAST CONCRETE WHEEL STOP

NOT TO SCALE

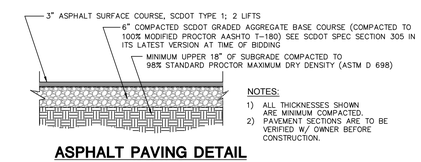

NOTES:

1) ALL THICKNESSES SHOWN ARE MINIMUM COMPACTED.
2) PAVEMENT SECTIONS ARE TO BE VERIFIED W/ OWNER BEFORE CONSTRUCTION.

ASPHALT PAVING DETAIL

NOT TO SCALE

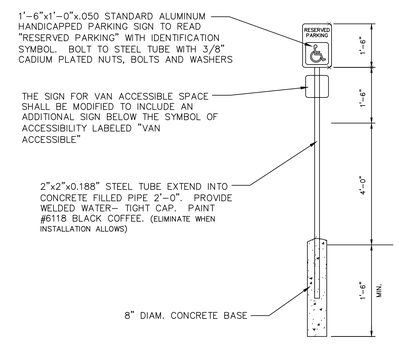

TYPICAL HANDICAP PARKING SIGN

NOT TO SCALE

SIGN LEGEND

NOT TO SCALE

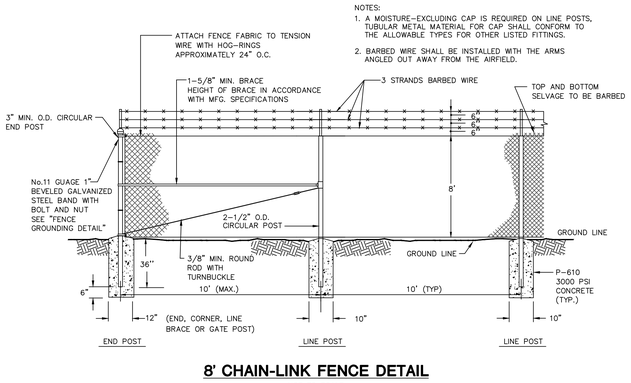

NOTES:

1. A MOISTURE-EXCLUDING CAP IS REQUIRED ON LINE POSTS, TUBULAR METAL MATERIAL FOR CAP SHALL CONFORM TO THE ALLOWABLE TYPES FOR OTHER LISTED FITTINGS.
2. BARBED WIRE SHALL BE INSTALLED WITH THE ARMS ANGLED OUT AWAY FROM THE AIRFIELD.

8' CHAIN-LINK FENCE DETAIL

NOT TO SCALE

NOTES:

1. A MOISTURE-EXCLUDING CAP IS REQUIRED ON LINE POSTS, TUBULAR METAL MATERIAL FOR CAP SHALL CONFORM TO THE ALLOWABLE TYPES FOR OTHER LISTED FITTINGS.
2. BARBED WIRE SHALL BE INSTALLED WITH THE ARMS ANGLED OUT AWAY FROM THE AIRFIELD.
3. TEMPORARY FENCE WILL ONLY NEED CONCRETE FOOTINGS ON THE END AND CORNER POST. TEMPORARY FENCE IS SHOWN ON THE CONSTRUCTION SAFETY AND PHASING PLAN SHEET C2.02.

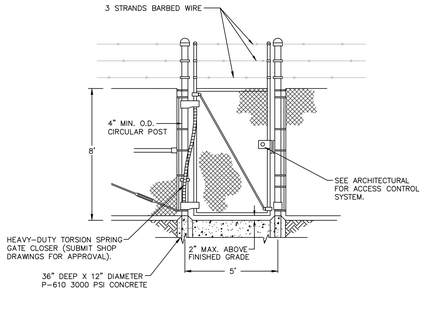

5'x8' PEDESTRIAN GATE DETAIL

NOT TO SCALE

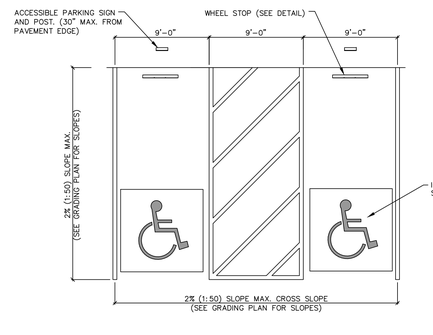

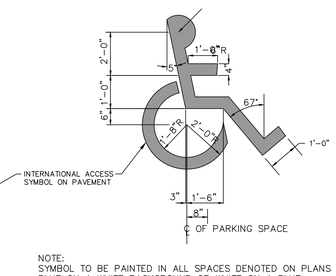

NOTE:
SYMBOL TO BE PAINTED IN ALL SPACES DENOTED ON PLANS EITHER BLUE ON A WHITE BACKGROUND OR WHITE ON A BLUE BACKGROUND

HANDICAP PARKING LAYOUT

NOT TO SCALE

NEWBERRY COUNTY AIRPORT
1139 AIRPORT ROAD
NEWBERRY, SC 29108

TERMINAL RENOVATION & EXPANSION

SOUTH CAROLINA REGISTERED No. 22297 ANDREW SINGER 5/1/18

SOUTH CAROLINA TALBERT, BRIGHT & ELLINGTON COA-4350 CERTIFICATE OF AUTHORIZATION

ARCHITECT

THE WILSON GROUP
P O BOX 5510
CHARLOTTE, NC 28299
(704) 331-9747

PROJECT MANAGER | CIVIL ENGINEER
TALBERT, BRIGHT & ELLINGTON
2000 PARK STREET, SUITE 101
COLUMBIA, SC 29201
(803) 933-9290

STRUCTURAL ENGINEER
STEWART
200 S. COLLEGE ST, SUITE 720
CHARLOTTE, NC 28202
(704) 334-7925

MECHANICAL, ELECTRICAL, PLUMBING & FIRE PROTECTION ENGINEER
SABER ENGINEERING
2923 SOUTH TRYON STREET, SUITE 280
CHARLOTTE, NC 28203
(704) 373-0068

REVISIONS

DATE	2018-04-11
PROJECT NUMBER	3309-1701
SHEET TITLE	

MISCELLANEOUS DETAILS

SHEET NUMBER

C-07

PALMETTO UTILITY PROTECTION SERVICE DIAL 811 CALL BEFORE YOU DIG!

GENERAL

1. THESE GENERAL NOTES ARE NOT INTENDED TO REPLACE SPECIFICATIONS. SEE SPECIFICATIONS FOR REQUIREMENTS IN ADDITION TO GENERAL NOTES.
2. THE STRUCTURAL DRAWINGS AND SPECIFICATIONS REPRESENT THE FINISHED STRUCTURE, AND, EXCEPT WHERE SPECIFICALLY SHOWN, DO NOT INDICATE THE METHOD OR MEANS OF CONSTRUCTION. THE CONTRACTOR SHALL SUPERVISE AND DIRECT THE WORK AND SHALL BE SOLELY RESPONSIBLE FOR ALL CONSTRUCTION MEANS, METHODS, PROCEDURES, TECHNIQUES, AND SEQUENCE. ALL APPLICABLE SAFETY REGULATIONS TO BE FOLLOWED STRICTLY.
3. THE STRUCTURE HAS BEEN DESIGNED TO RESIST DESIGN LOADS ONLY AS A COMPLETED STRUCTURE. APPLICATIONS OF CONSTRUCTION LOADS TO THE PARTIALLY COMPLETED STRUCTURE SHALL BE CONSIDERED BY THE CONTRACTOR AND SO INCLUDED IN THE DESIGN OF SHORING, BRACING, FORMWORK, AND ANY OTHER SUPPORTING ELEMENTS PROVIDED FOR CONSTRUCTION OF THE STRUCTURE. DURING ERECTION AND UNTIL ALL PERMANENT CONNECTIONS ARE MADE, THE CONTRACTOR MUST PROVIDE TEMPORARY BRACING FOR THE STRUCTURE IN ALL DIRECTIONS.
4. THE GENERAL CONTRACTOR SHALL CHECK AND VERIFY ALL DIMENSIONS AND GRADE CONDITIONS (BOTH NEW AND EXISTING), REPORTING ANY DISCREPANCIES TO THE ARCHITECT PRIOR TO ORDERING MATERIALS OR PROCEEDING WITH ANY PHASE OF THE WORK.
5. THE CONTRACTOR SHALL COMPARE STRUCTURAL SECTIONS WITH ARCHITECTURAL SECTIONS AND REPORT ANY DISCREPANCY TO THE ARCHITECT PRIOR TO FABRICATION OR INSTALLATION OF STRUCTURAL MEMBERS.
6. DO NOT SCALE DIMENSIONS FROM DRAWINGS. THE CONTRACTOR SHALL REQUEST, FROM THE ARCHITECT, NECESSARY DIMENSIONS NOT SHOWN ON THE DRAWINGS.
7. IF ANY BIDDER IS IN DOUBT AS TO THE INTENT OF THE PLANS OR SPECIFICATIONS, THEY SHALL REQUEST AN INTERPRETATION FROM THE ARCHITECT IN WRITING AT LEAST TEN (10) DAYS PRIOR TO THE SCHEDULED BID DATE.
8. PRINCIPAL OPENINGS IN THE STRUCTURE ARE SHOWN ON THESE DRAWINGS. THE GENERAL CONTRACTOR SHALL EXAMINE THE ARCHITECTURAL MECHANICAL, ELECTRICAL, AND PLUMBING DRAWINGS FOR REQUIRED OPENINGS AS THEY SHALL BE PROVIDED FOR WHETHER SHOWN ON THESE DRAWINGS OR NOT. GENERAL CONTRACTOR SHALL VERIFY SIZE AND LOCATION OF ALL OPENINGS WITH ALL SUB-CONTRACTORS PRIOR TO CONSTRUCTION.
9. WHERE A CONFLICT BETWEEN DRAWINGS AND SPECIFICATIONS OCCURS THE MORE STRINGENT REQUIREMENT SHALL APPLY.
10. WHERE A DETAIL IS SHOWN FOR ONE CONDITION, IT SHALL APPLY FOR ALL LIKE OR SIMILAR CONDITIONS EVEN THOUGH NOT SPECIFICALLY REFERENCED ON THE DRAWINGS.

DESIGN CRITERIA

1. APPLICABLE CODES:
    - A. 2015 INTERNATIONAL BUILDING CODE (IBC) W/SOUTH CAROLINA BUILDING CODES MODIFICATIONS (2015)
    - B. MINIMUM DESIGN LOADS FOR BUILDINGS AND OTHER STRUCTURES (ASCE 7-10)
    - C. BUILDING CODE REQUIREMENTS FOR STRUCTURAL CONCRETE (ACI 318-14)
    - D. BUILDING CODE REQUIREMENTS FOR MASONRY STRUCTURES (ACI 318-13)
2. LIVE LOADS

LIVE LOADS	UNIFORM (PSF)	CONCENTRATED(LB)
CORRIDORS (GROUND)	100	2,000
OFFICE	50*	2,000
MEETING ROOM	50	N/A
PUBLIC AREAS, LOBBIES	100	2,000
ROOF	20	300

* ADDITIONAL 15 PSF PARTITION LOAD INCLUDED

3. OCCUPANCY CATEGORY: II
4. SNOW LOAD:

GROUND SNOW LOAD	Pg = 10 PSF
IMPORTANCE FACTOR	Is = 1.0
SNOW EXPOSURE FACTOR	Ce = 0.9
THERMAL FACTOR	Ct = 1.0
FLAT SNOW ROOF LOAD	Pf = 10 PSF
DRIFT SURCHARGE LOAD	Pd = 33 PSF
WIDTH OF SNOWDRIFT	W = 6 FT

5. WIND LOAD:

BASIC DESIGN WIND VELOCITY	V = 115 MPH	
IMPORTANCE FACTOR	Iw = 1.0	
EXPOSURE CATEGORY	C	
INTERNAL PRESSURE COEFFICIENTS	±0.18	
BASE SHEAR	Vx = 9.7k	Vy = 27.0k

6. COMPONENTS & CLADDING WIND PRESSURE PER ASCE-7-10.

ZONE	NET AREA (SF)	POSITIVE PRESSURE (PSF)	NEGATIVE PRESSURE (PSF)
1	10	+20.1	-32.0
1	20	+18.4	-31.1
1	50	+16.1	-30.0
1	100	+14.2	-29.0
2	10	+20.1	-55.8
2	20	+18.4	-51.3
2	50	+16.1	-45.4
2	100	+14.2	-40.9
3	10	+20.1	-82.4
3	20	+18.4	-77.1
3	50	+16.1	-69.9
3	100	+14.2	-64.7
4	10	+35.0	-37.9
4	20	+33.3	-36.3
4	50	+31.3	-34.3
4	100	+29.7	-32.7
5	10	+35.0	-46.8
5	20	+33.3	-43.7
5	50	+31.3	-39.6
5	100	+29.7	-36.3

NOTES:
A. ZONE PER FIGURE 30.5-1 ASCE 7-10 WHERE A= 10FT(ENCLOSED BUILDING)
COMPONENTS AND CLADDING - ALL BUILDING COMPONENTS AND CLADDING ENGINEERED BY THE COMPONENT MANUFACTURER ARE TO BE DESIGNED BY THE MANUFACTURER'S ENGINEER FOR WIND LOADS DETERMINED PER THE 2015 INTERNATIONAL BUILDING CODE FOR THE DESIGN WIND PRESSURES LISTED ABOVE.

7. SEISMIC LOAD (2008 USGS SEISMIC DESIGN MAPS):
DESIGN METHOD - EQUIVALENT LATERAL FORCE PROCEDURE

Ss	33.0 %g	
S1	11.9 %g	
Sds	33.8 %g	
Sd1	18.4 %g	
IMPORTANCE FACTOR	Ie = 1.0	
SITE CLASS	D	
SEISMIC RESPONSE COEFFICIENT	Csx = 0.17	Csy = 0.17
SEISMIC DESIGN CATEGORY	C	
BASIC SEISMIC FORCE RESISTING SYSTEM:		
WOOD SHEAR WALLS W/WOOD STRUCTURAL PANELS	Rx=Ry=6.5	Cdx=Cdy=4.0
ORDINARY REINFORCED MASONRY SHEAR WALLS	Rx=Ry=2.0	Cdx=Cdy=1.75
SEISMIC BASE SHEARS	Vx = 12.8K	Vy = 12.8K
EQUIVALENT LATERAL FORCE PROCEDURE		

8. FUTURE LOADS:
UNLESS SPECIFICALLY NOTED, THERE ARE NO PROVISIONS MADE FOR FUTURE FLOORS, ROOFS, OR OTHER LOADS.

FOUNDATIONS

1. FOUNDATION DESIGN IS BASED ON A PRESUMPTIVE ALLOWABLE SOIL BEARING PRESSURE OF 2,000 PSF, ACCORDING TO IBC TABLE 1806.2. THIS PRESUMPTIVE BEARING PRESSURE MUST BE FIELD VERIFIED BY A GEOTECHNICAL ENGINEER PRIOR TO FOUNDATION CONCRETE PLACEMENT.
2. FOOTINGS SHALL BE CARRIED TO LOWER ELEVATIONS THAN THOSE SHOWN ON THE DRAWINGS IF REQUIRED BY THE GEOTECHNICAL ENGINEER OR TESTING LAB TO REACH SOIL CAPABLE OF PROVIDING THE DESIGN ALLOWABLE SOIL BEARING PRESSURE.
3. THE SUBGRADE AND UNDERFLOOR FILL SHALL BE PREPARED TO A POINT THAT EXTENDS 3'-0" MINIMUM BEYOND THE LIMITS OF THE FOUNDATION.
4. UTILITY LINES SHALL NOT BE PLACED THROUGH OR BELOW FOUNDATIONS WITHOUT APPROVAL OF THE STRUCTURAL ENGINEER. CONTRACTOR SHALL SUBMIT DETAILED DRAWINGS OF ALL SUCH CONDITIONS PRIOR TO CONSTRUCTION.

CONCRETE / REINFORCING STEEL

1. CONCRETE COMPRESSIVE STRENGTH IN 28 DAYS:
SLAB ON GRADE, FOOTINGS, GRADE BEAMS 3,000 PSI, NORMAL WEIGHT
2. REINFORCING:
TYPICAL - ASTM A615, GRADE 60
REINFORCING TO BE WELDED - ASTM A706
DEFORMED BAR ANCHORS - ASTM A 496
WELDED WIRE FABRIC - ASTM A1064 (FLAT SHEETS ONLY)
3. REFER TO THE DRAWINGS FOR REINFORCING LAP REQUIREMENTS. WHERE LAP SPLICES ARE NOT SHOWN, LAP PER ACI 318 OR CRSI STANDARDS.
4. LAP WELDED WIRE FABRIC SHEETS 8" MINIMUM.
5. CLEAR COVER FROM FACE OF CONCRETE:
CAST IN PLACE CONCRETE (MEASURE TO OUTERMOST REINFORCING) -

CONCRETE CAST AGAINST AND EXPOSED TO EARTH	3"
CONCRETE EXPOSED TO EARTH/WEATHER	2" FOR #6 BARS AND LARGER 1 1/2" ELSE
CONCRETE NOT EXPOSED TO EARTH/WEATHER	3/4" FOR SLABS AND WALLS 1 1/2" FOR BEAMS AND COLUMNS (TO TIES)

6. PROVIDE REINFORCING IN SLABS ON GRADE, 1-1/2" FROM TOP OF SLAB:
4" SLABS 6x6-W2.1xW2.1
7. WHERE SCHEDULED BARS ARE NOT PRESENT, PROVIDE CONTINUOUS #5 TOP AND BOTTOM BARS TO SUPPORT STIRRUPS AS REQUIRED FOR THE LENGTH OF THE STIRRUP SPACING IN ALL BEAMS.
8. WALL FOOTING REINFORCING SHALL BE CONTINUOUS THROUGH ADJACENT COLUMN FOOTINGS.
9. FOR SLABS ON GRADE, SLAB AND FOOTING REINFORCING SHALL BE HELD IN PLACE BY BAR SUPPORTS WITH SAND PLATES, OR PRECAST CONCRETE BAR SUPPORTS AS DESCRIBED IN CHAPTER 3 OF THE CRSI MANUAL OF STANDARD PRACTICE. BAR SUPPORTS SHALL BE SPACED AT A MAXIMUM OF 4'-0"OC BOTH WAYS. ROCKS, CMU, OR CLAY BRICK WILL NOT BE USED AS SUPPORTS.
10. REBAR SHALL NOT BE HEATED WITH A TORCH IN THE FIELD.
11. THE CONTRACTOR SHALL NOTIFY THE ARCHITECT/ENGINEER FAR ENOUGH IN ADVANCE (48 HOURS) OF EACH CONCRETE POUR TO ALLOW AMPLE TIME TO CHECK THE LAYOUT OF THE STEEL BEFORE THE BEGINNING OF THE ACTUAL POUR, BUT NOT PRIOR TO 90% OF THE STEEL HAVING BEEN PLACED.

CONCRETE CONSTRUCTION JOINTS

1. CONTRACTOR SHALL PROVIDE NECESSARY CONSTRUCTION JOINTS IN MONOLITHIC CONCRETE POURS SO THAT THE QUALITY OF PLACEMENT AND FINISH MEETS THE REQUIREMENTS OF PLANS AND SPECIFICATIONS. THE CONTRACTOR SHALL SUBMIT A PLAN SHOWING THE LOCATION OF ALL CONSTRUCTION JOINTS TO THE STRUCTURAL ENGINEER FOR APPROVAL.
2. THERE SHALL BE NO HORIZONTAL CONSTRUCTION JOINTS IN CONCRETE POURS. ALL VERTICAL CONSTRUCTION JOINTS IN SLABS AND BEAMS SHALL BE MADE WITH BULKHEADS. ADDITIONAL REINFORCING AT CONSTRUCTION JOINTS SHALL BE AS SPECIFIED BY THE STRUCTURAL ENGINEER. SEE TYPICAL CONSTRUCTION JOINT DETAILS.

LUMBER

1. ALL LUMBER AND ITS FASTENINGS SHALL CONFORM TO THE NATIONAL DESIGN SPECIFICATION FOR WOOD CONSTRUCTION, LATEST EDITION, BY THE AMERICAN FOREST AND PAPER ASSOCIATION.
2. ALL LUMBER SHALL BE OF THE FOLLOWING PROPERTIES UNLESS OTHERWISE NOTED (OR EQUIVALENT GRADE OF ANOTHER SPECIES):
ALL STRUCTURAL LUMBER (SPRUCE-PINE-FIR NO. 2) - CONTRACTOR NOTE: SPF (SOUTH) IS NOT ACCEPTABLE

2x4	Fb	1,313 PSI
	Fc	1,323 PSI (PARALLEL TO GRAIN)
2x6	Fb	1,138 PSI
	Fc	1,265 PSI (PARALLEL TO GRAIN)
2x8	Fb	1,050 PSI
	Fc	1,208 PSI (PARALLEL TO GRAIN)
2x10	Fb	963 PSI
	Fc	1,150 PSI (PARALLEL TO GRAIN)
2x12	Fb	875 PSI
	Fc	1,150 PSI (PARALLEL TO GRAIN)
	Fv	135 PSI (ALL SIZES NOTED ABOVE)
	E	1,400 KSI (ALL SIZES NOTED ABOVE)

3. ALL WOOD BEARING ON CONCRETE, MASONRY, OR EXPOSED TO WEATHER SHALL BE PRESSURE TREATED SOUTHERN PINE. ALL ENGINEERED LUMBER BEARING ON CONCRETE, MASONRY, OR EXPOSED TO WEATHER SHALL BE CHEMICALLY TREATED OR WOLMANIZED TO MEET AWPA USE CATEGORY 3 OR 4.
4. ALL SILL PLATES SHALL BE ANCHORED TO CONCRETE OR MASONRY WITH A MINIMUM ½" DIAMETER ANCHOR BOLT (6" MIN EMBED) @48" OC , UNO.
5. STRUCTURAL MEMBERS SHALL NOT BE CUT FOR PIPES, DUCTWORK, ETC., UNLESS SPECIFICALLY NOTED OR DETAILED.
6. HOLES FOR BOLTS SHALL BE BORED 1/32" TO 1/16" LARGER THAN THE NOMINAL BOLT DIAMETER.
7. ALL BOLTS SHALL BE RE-TIGHTENED PRIOR TO APPLICATION TO GYPSUM WALLBOARD, PLYWOOD, ETC.
8. ALL BOLTS BEARING ON WOOD SHALL HAVE WASHERS UNDER HEAD AND/OR NUT.
9. ALL NAILS SHALL BE COMMON UNLESS NOTED OTHERWISE.
10. STANDARD WOOD CONNECTORS MUST BE PROVIDED BY THE GENERAL CONTRACTOR FOR WOOD FRAMED MEMBERS. INTERIOR FRAMING CONNECTORS MUST BE G90 GALVANIZED ZINC CONNECTORS. EXTERIOR FRAMING CONNECTORS MUST BE G185 GALVANIZED ZINC COATING, MINIMUM.

SHEATHING

1. ALL SHEATHING SHALL BE PLYWOOD OR OSB. ALL PLYWOOD SHEATHING, DIAPHRAGMS, AND SHEAR WALL PANELS SHALL CONFORM TO U.S. PRODUCT STANDARD PS-1-07 WITH EXTERIOR GLUE. ALL OSB SHEATHING, DIAPHRAGMS, AND SHEAR WALL PANELS SHALL CONFORM TO U.S. PRODUCT STANDARD PS-2-04.
2. SHEATHING SHEETS SHALL BE LAID WITH LONG DIMENSION PERPENDICULAR TO THE SUPPORTING FRAMING.
3. SEE SHEAR WALL SCHEDULE FOR SHEATHING FASTENING REQUIREMENTS AT SHEAR WALL.
4. WALL SHEATHING SHALL BE 7/16" EXTERIOR GRADE (SPAN RATING 24/16), UNO IN SHEAR WALL SCHEDULE. ALL WALL SHEATHING EXCEPT AT SHEAR WALLS SHALL BE FASTENED WITH 8d NAILS @6"OC AT ALL EDGES AND 8d NAILS @12"OC IN PANEL FIELD. PROVIDE 2x4 BLOCKING AT ALL PANEL EDGES IN SHEAR WALL. SHEAR WALL NAILING PATTERNS SHALL BE AS INDICATED IN SHEAR WALL SCHEDULE.
5. WOOD ROOF SHEATHING SHALL BE 19/32" EXTERIOR GRADE (SPAN RATING 40/20) AND SHALL BE FASTENED WITH 8d NAILS @6"OC AT ALL EDGES AND 8d NAILS @12"OC IN PANEL FIELD. PROVIDE 2x4 BLOCKING OR CLIPS AT MIDSPAN AND AT ALL PANEL EDGES.

PREFABRICATED WOOD TRUSSES

1. PREFABRICATED ROOF TRUSS MANUFACTURER SHALL SUBMIT CALCULATIONS AND TRUSS LAYOUT OR FRAMING PLAN TO SECURE APPROVALS FROM ARCHITECT AND BUILDING DEPARTMENT PRIOR TO ERECTION.
2. ALL LUMBER AND ITS FASTENINGS SHALL CONFORM TO THE NATIONAL DESIGN SPECIFICATION FOR WOOD CONSTRUCTION, LATEST EDITION, BY THE AMERICAN FOREST AND PAPER ASSOCIATION. CONFORM TO APPLICABLE PROVISIONS OF TPI DESIGN SPECIFICATIONS FOR METAL PLATE CONNECTED WOOD TRUSSES (LATEST EDITION).
3. DESIGN SHALL CONSIDER LOADS INDICATED AS WELL AS ALL MECHANICAL EQUIPMENT AND CEILING SOFFIT CONSTRUCTION SHOWN ON THE ARCHITECTURAL DRAWINGS.
4. TRUSSES SHALL BE DESIGNED FOR THE FOLLOWING MINIMUM LOADS:

TOP CHORD	DL = 10 PSF (AT ROOF)
	DL = 20 PSF (AT FLOOR)
	LL = 20 PSF (AT ROOF)
	LL = PER CODE (AT FLOOR)
BOTTOM CHORD	DL = 10 PSF
	DL = 350 LB AT ANY POINT (SPRINKLER PIPE)

5. TRUSS SUPPLIER SHALL CALCULATE UPLIFT LOADS BASED ON THE WIND LOAD CRITERIA LISTED IN THESE GENERAL NOTES. AT A MINIMUM THE NET WIND UPLIFT LOAD SHALL BE 20 PSF.
6. TRUSS CHORDS AND WEBS SHALL BE DOUGLAS FIR OR SOUTHERN PINE, PS 20, GRADED TO NFPA RULES:
MAXIMUM MOISTURE CONTENT - 19%
MINIMUM GRADE OF CHORD - NO. 2
MINIMUM GRADE OF WEB MEMBERS - NO. 3
7. ALL TRUSSES SHALL BE DESIGNED FOR THE ACTUAL DEAD LOAD PLUS LIVE LOAD (SPECIFIED ABOVE). MAXIMUM DEFLECTION DUE TO LIVE LOAD ONLY SHALL NOT EXCEED L/360. MAXIMUM DEFLECTION DUE TO TOTAL LOAD SHALL NOT EXCEED L/240. ROOF SLOPE SHALL BE 1/4" PER FOOT OR GREATER AFTER LONG TERM DEFLECTION OCCURS.
8. SUBMIT SHOP DRAWINGS FOR ALL TRUSSES. SHOP DRAWINGS SHALL INDICATE PLACING OF ALL FRAMING MEMBERS SHOWING TYPE, SIZE, NUMBER, LOCATION AND SPACING. THEY SHALL ALSO INDICATE SUPPLEMENTAL BRACING, SPLICES, BRIDGING, ACCESSORIES AND DETAILS REQUIRED FOR PROPER INSTALLATION. SHOP DRAWINGS SUBMITTED MUST BE PREPARED UNDER THE SUPERVISION OF AND SEALED BY A REGISTERED PROFESSIONAL ENGINEER LICENSED IN THE STATE IN WHICH THE PROJECT IS LOCATED.
9. TRUSS MANUFACTURER SHALL PROVIDE A TRUSS LAYOUT PLAN INDICATING ALL TRUSSES WITH PIECE MARKS AND DIMENSIONS. THIS DRAWING SHALL BE SEALED BY THE TRUSS ENGINEER. THEIR SEAL SHALL ONLY ATTEST TO THE PERFORMANCE OF THE TRUSSES, THEIR CONNECTIONS TO ONE ANOTHER (GIRDER TRUSSES, MULTI-PLY, PIGGY-BACK, VALLEY, ETC) AND THAT ALL NOTED DESIGN LOADS HAVE BEEN ACCOUNTED FOR IN THE DESIGN OF THE TRUSSES. IT IS NOT THE INTENT THAT THE TRUSS ENGINEER BE RESPONSIBLE FOR LOAD PATH BELOW THE BEARING ELEVATION UNLESS CHANGES TO THE TRUSS LAYOUT ARE MADE RELATIVE TO THE CONTRACT DOCUMENTS.
10. ALL TRUSSES AND CONNECTIONS SHALL BE DESIGNED BY THE SUPPLIER'S ENGINEER. SUBMIT CALCULATIONS FOR ALL TRUSSES AND THEIR CONNECTIONS. CALCULATIONS SHALL INCLUDE ALL DESIGN LOADS, MAXIMUM AXIAL TENSION AND COMPRESSION IN TRUSS MEMBERS, CALCULATED MAXIMUM DEFLECTIONS AND SPAN-TO-DEFLECTION RATIOS FOR LIVE AND TOTAL LOADS, AND REACTION FORCES AND DIRECTIONS, INCLUDING MAXIMUM UPLIFT REACTION FORCES.
11. ALL TRUSSES SHALL BE BRACED TO PREVENT ROTATION AND PROVIDE LATERAL STABILITY. SHOP DRAWINGS SHALL INDICATE ALL LATERAL BRIDGING REQUIRED WHICH SHALL BE SUPPLIED BY THE CONTRACTOR.
12. TRUSS SHOP DRAWINGS SHALL INCLUDE PERMANENT INDIVIDUAL TRUSS MEMBER RESTRAINT REQUIREMENTS CLEARLY NOTED ON THE LAYOUT DRAWING.
13. GABLE ENDWALL TRUSSES SHALL BE DESIGNED FOR THE COMPONENTS AND CLADDING LOADS OF 20 PSF. DEFLECTION OF THE VERTICAL SUPPORT MEMBERS SHALL BE LESS THAN L/360. SUPPLY BRACING AS REQUIRED FOR LOADS AND DEFLECTION. SEALED CALCULATIONS SHALL BE PROVIDED BY THE TRUSS ENGINEER FOR ALL GABLE ENDWALL TRUSSES.
14. ALL BRACING MATERIAL SHALL BE A MINIMUM 2x4 SPRUCE PINE FIR NO 2 OR BETTER ANCHORED WITH AT LEAST (2) 16d NAILS AT EACH TRUSS.
15. IF PERMANENT TRUSS RESTRAINT/BRACING FOR TOP, BOTTOM AND WEB MEMBERS ARE NOT DETAILED ON THE TRUSS LAYOUT DRAWINGS, THEN BRACING SHALL BE IN ACCORDANCE WITH BCSI-B3 OR BCSI-B7 FOR PARALLEL CHORD TRUSSES.
16. TEMPORARY BRACING, WHERE REQUIRED, SHALL BE PROVIDED UNTIL THE ERECTION IS COMPLETE.

ADHESIVE AND MECHANICAL POST-INSTALLED ANCHORS

1. ANCHOR BOLTS, REINFORCING STEEL, THREADED RODS, STAIR HANDRAILS, AND OTHER EMBEDDED STEEL ITEMS SHALL BE SET INTO HARDENED CONCRETE WITH ADHESIVE OR MECHANICAL POST-INSTALLED ANCHOR ONLY WHERE DETAILED ON THE DRAWINGS OR WHERE APPROVED BY THE ENGINEER.
2. PRE-APPROVED MANUFACTURERS ARE HILTI, SIMPSON STRONG-TIE, AND DEWALT. WHERE DETAILS INDICATE SPECIFIC ADHESIVE OR MECHANICAL POST-INSTALLED ANCHORS, IT IS ACCEPTABLE AT THE CONTRACTOR'S OPTION TO SUBMIT AN ALTERNATE SIMILAR PRODUCT PROVIDED BY A DIFFERENT MANUFACTURER AS LONG AS THE MANUFACTURER'S DATA PROVIDES EQUIVALENT LOAD CAPACITY TO THE ANCHOR SPECIFIED.
3. MANUFACTURER'S DATA FOR ALL ADHESIVE AND MECHANICAL POST-INSTALLED ANCHORS SHALL BE SUBMITTED TO THE ENGINEER FOR APPROVAL PRIOR TO INSTALLATION. SUBMITTALS FOR ADHESIVE ANCHOR PRODUCTS SHALL INCLUDE ICC-ES EVALUATION REPORTS. STRICTLY FOLLOW THE MANUFACTURER'S SPECIFICATIONS AND INSTALLATION INSTRUCTIONS. HEED ALL LABEL WARNINGS. INSTALL IN ACCORDANCE WITH APPLICABLE SAFETY LAWS.
4. ALL HOLES SHALL BE DRILLED WITH A DIAMETER NO LARGER THAN 1/8" GREATER THAN THE DIAMETER OF THE STEEL MEMBER BEING INSTALLED.
5. ALL HOLES SHALL BE CLEANED WITH COMPRESSED AIR AND SHALL BE DRY PRIOR TO INSTALLATION OF ADHESIVE. HOLES SHALL BE FREE OF ALL DELETERIOUS MATERIAL SUCH AS LAITANCE, DUST, DIRT, AND OIL.
6. CONTRACTOR PERFORMING ADHESIVE WORK SHALL BE AN APPROVED CONTRACTOR BY THE MANUFACTURER FURNISHING THE ADHESIVE MATERIALS, AND SHALL HAVE NO LESS THAN FIVE YEARS EXPERIENCE IN THE VARIOUS TYPES OF ADHESIVE RELATED WORK REQUIRED IN THIS PROJECT. A CERTIFICATION FROM THE MANUFACTURER ATTESTING TO THE TRAINING SHALL BE SUBMITTED TO THE ENGINEER/ARCHITECT ALONG WITH THE PROPOSAL TO DO THE WORK.
7. WHERE ADHESIVE ANCHORS ARE TO BE INSTALLED IN HOLLOW MATERIAL WITH UNKNOWN CAPACITY, THE CONTRACTOR SHALL INSTALL THE ANCHOR IN STRICT ACCORDANCE WITH MANUFACTURER'S INSTRUCTIONS.
8. THE ADHESIVE SHALL BE INSTALLED IN THE HOLLOW BASE MATERIAL USING SCREEN TUBES SUPPLIED BY THE MANUFACTURER. THE ADHESIVE SHALL BE CAPABLE OF SUSTAINING MINIMUM TENSION AND SHEAR LOAD CAPACITIES NOTED ON THE DRAWINGS MULTIPLIED BY A FACTOR OF SAFETY OF 4. ALL HARDWARE AND MATERIAL SHALL BE SUPPLIED BY THE ANCHOR MANUFACTURER.
9. THE ULTIMATE TENSION AND SHEAR CAPACITIES SHALL BE DETERMINED BY A JOB SITE TEST PERFORMED ON A MINIMUM OF FIVE INSTALLED SAMPLES WHICH ARE REPRESENTATIVE OF THE ACTUAL INSTALLATIONS. TESTING SHALL BE PERFORMED BY THE ADHESIVE ANCHOR MANUFACTURER OR HIS APPROVED REPRESENTATIVE AND SHALL BE DOCUMENTED FOR THE DESIGN PROFESSIONAL.

DEMOLITION

1. THE CONTRACTOR SHALL NOTIFY ALL LOCAL AGENCIES HAVING JURISDICTION, AND SHALL OBTAIN ALL NECESSARY PERMITS REQUIRED FOR THE DEMOLITION AND REMOVAL OF THE DEBRIS RESULTING FROM THE DEMOLITION.
2. CONTRACTOR SHALL RETAIN, AT THEIR EXPENSE, A REGISTERED PROFESSIONAL ENGINEER LICENSED IN THE STATE IN WHICH THE PROJECT IS LOCATED, TO DETERMINE ALL CONSTRUCTION PHASE SHORING REQUIREMENTS. CONTRACTOR SHALL SUBMIT TO THE OWNER AND THE ENGINEER OF RECORD, SIGNED AND SEALED DRAWINGS, OUTLINING OPERATIONAL SEQUENCES, SHORING CONCEPTUAL PLANS, METHODS USED FOR THE PROTECTION OF STRUCTURES TO REMAIN AND NEIGHBORING STRUCTURES.
3. CONTRACTOR SHALL BE SOLELY RESPONSIBLE FOR THE PROTECTION AND STABILITY OF EXISTING AND NEW STRUCTURES DURING CONSTRUCTION.
4. BEFORE UNDERTAKING ANY DEMOLITION WORK OR ORDERING MATERIAL, ASCERTAIN BY SURVEY THE EXISTING CONDITIONS OF THE PROPERTIES AND BUILDINGS ADJOINING OR IN CLOSE PROXIMITY TO THE PREMISES. THE ARCHITECT SHALL BE NOTIFIED OF ANY DISCREPANCY.
5. PROVIDE AND MAINTAIN BRACING AND SHORING AS NEEDED. KEEP SUPPORTING STRUCTURE IN PLACE DURING NEW CONSTRUCTION AND UNTIL NEW STRUCTURE IS COMPLETED.
6. STORE AND PROTECT ALL MATERIAL TO BE REMOVED AND REUSED.
7. IF SAFETY OR INTEGRITY OF STRUCTURAL SYSTEM APPEARS TO BE COMPROMISED, CEASE OPERATIONS IMMEDIATELY AND NOTIFY THE OWNER AND THE ENGINEER. PROPERLY BRACE AND SUPPORT STRUCTURE BEFORE RESUMING OPERATIONS.
8. ANY DAMAGE OCCURRING TO THE EXISTING STRUCTURE, ADJACENT STRUCTURES, STREETS, SIDEWALKS, UTILITY LINES OR ANY OTHER PUBLIC OR PRIVATE PROPERTIES, SHALL BE REINSTALLED TO THE ORIGINAL CONDITION BY THE CONTRACTOR AT NO COST TO THE OWNER OR THE ENGINEER.
9. ALL OPENINGS IN EXISTING CONSTRUCTION SHALL BE SAW CUT OR DRILLED.

REPRODUCTION

1. THE USE OF REPRODUCTIONS OF THESE CONTRACT DRAWINGS BY ANY CONTRACTOR, SUBCONTRACTOR, ERECTOR, FABRICATOR, OR MATERIAL SUPPLIER IN LIEU OF PREPARATION OF SHOP DRAWINGS SIGNIFIES HIS ACCEPTANCE OF ALL INFORMATION SHOWN HEREIN AS CORRECT, AND OBLIGATES HIMSELF TO ANY JOB EXPENSE, REAL OR IMPLIED, ARISING DUE TO ANY ERRORS THAT MAY OCCUR HERE ON.

ABBREVIATION LIST

@	AT
&	AND
Ø	DIAMETER
AB	ANCHOR BOLTS
ACI	AMERICAN CONCRETE INSTITUTE
ADDL	ADDITIONAL
ADH	ADHESIVE
AFF	ABOVE FINISHED FLOOR
AISC	AMERICAN INSTITUTE OF STEEL CONSTRUCTION
AISI	AMERICAN IRON AND STEEL INSTITUTE
ALT	ALTERNATE
ARCH	ARCHITECT'S / ARCHITECTURAL
ASTM	AMERICAN SOCIETY FOR TESTING AND MATERIALS
AWS	AMERICAN WELDING SOCIETY
B/ or BOT	BOTTOM
BCX	BOTTOM CHORD EXTENSION
BFF	BELOW FINISHED FLOOR
BLDG	BUILDING
BM	BEA,
BOS	BOTTOM OF STEEL
BRG	BEARING
BTWN	BETWEEN
CANT	CANTILEVER
CJ	CONTROL JOINT
CL	CENTERLINE
CLR	CLEAR
CMU	CONCRETE MASONRY UNIT
COL	COLUMN
CONC	CONCRETE
CONN	CONNECTION
CONST JT	CONSTRUCTION JOINT
CONT	CONTINUOUS
CONTR	CONTRACTOR
COORD	COORDINATE
CTRD	CENTERED
d	NAILS (PENNY)
DBA	DEFORMED BAR ANCHOR
DEFL	DEFLECTION
DEPR	DEPRESSION / DEPRESSED
DET	DETAIL
DIAG	DIAGONAL
DIM	DIMENSION
DIST	DISTANCE
DWG(S)	DRAWING(S)
DWL(S)	DOWEL(S)
EA	EACH
EE	EACH END
EF	EACH FACE
EJ	EXPANSION JOINT
ELEV	ELEVATION
EMBED	EMBEDDED / EMBEDMENT
ENGR	ENGINEER
EOD	EDGE OF DECK
EOS	EDGE OF SLAB
EQ	EQUAL
EQUIP	EQUIPMENT
EW	EACH WAY
EXIST	EXISTING
EXP	EXPANSION
EXT	EXTERIOR
FDN	FOUNDATION
FFE	FINISHED FLOOR ELEVATION
FOM	FACE OF MASONRY
FOW	FACE OF WALL
FS	FAR SIDE
FTG	FOOTING
GA	GAUGE
GALV	GALVANIZED
HD	HEADED
HI	HIGH
HORIZ	HORIZONTAL
HSS	HOLLOW STRUCTURAL SECTION
INT	INTERIOR
JT	JOINT
K	KIP(S)
KB	KNEE BRACE
KSI	KIPS PER SQUARE INCH
LB	LONG BAR
LBS	POUNDS
LLH	LONG LEG HORIZONTAL
LLV	LONG LEG VERTICAL
LO	LOW
LOC	LOCATION
LSH	LONG SIDE HORIZONTAL
LSV	LONG SIDE VERTICAL
LWC	LIGHT WEIGHT CONCRETE
MAX	MAXIMUM
MC	MOMENT CONNECTION
MECH	MECHANICAL
MFR	MANUFACTURER
MID	MIDDLE
MIN	MINIMUM
MISC	MISCELLANEOUS
MOW	MIDDLE OF WALL
MP	MASONRY PILASTER
No or #	NUMBER
NS	NEAR SIDE
NTS	NOT TO SCALE
NWC	NORMAL WEIGHT CONCRETE
OC	ON CENTER
OPNG	OPENING
OPP	OPPOSITE HAND
PAF	POWDER ACTUATED FASTENER
PED	PEDESTAL
PL	PLATE
PSF	POUNDS PER SQUARE FOOT
PSI	POUNDS PER SQUARE INCH
PT	PRESSURE TREATED
P-T	POST-TENSIONED
REF	REFERENCE
REINF	REINFORCING
REQD	REQUIRED
SB	SHORT BAR
SCHD	SCHEDULE
SIM	SIMILAR
SOG	SLAB ON GRADE
SPEC(S)	SPECIFICATION(S)
SQ	SQUARE
STD	STANDARD
STIFF	STIFFENER
STIRR	STIRRUP(S)
STL	STEEL
STR	STRUCTURAL
T/	TOP
TCX	TOP CHORD EXTENSION
TOC	TOP CHORD CONCRETE
TOF	TOP OF FOOTING
TOS	TOP OF STEEL
TOW	TOP OF WALL
TYP	TYPICAL
UNO	UNLESS NOTED OTHERWISE
VERT	VERICAL
VIF	VERIFY IN FIELD
W/	WITH
WWF	WELDED WIRE FABRIC
WP	WORK POINT

NEWBERRY COUNTY AIRPORT

TERMINAL RENOVATION & EXPANSION

ARCHITECT

THE WILSON GROUP
P O BOX 5510
CHARLOTTE, NC 28299
(704) 331-9747

PROJECT MANAGER & CIVIL ENGINEER

TALBERT, BRIGHT & ELLINGTON
2000 PARK STREET, SUITE 101
COLUMBIA, NC 29201
(803) 933-9290

STRUCTURAL ENGINEER

STEWART
101 N. TRYON ST., SUITE 1400
CHARLOTTE, NC 28202
(704) 909-3523 FIRM NO.: C-1051

MECHANICAL, ELECTRICAL & PLUMBING ENGINEER

SABER ENGINEERING
2923 S. TRYON ST., SUITE 280
CHARLOTTE, NC 28203
(704) 373-0068

No. 24588
CHRISTOPHER R. HERRON
5/1/2018

REVISIONS

DATE MAY 1, 2018
PROJECT NUMBER 9198-000

SHEET TITLE
GENERAL NOTES & ABBREVIATIONS

SHEET NUMBER
S-001

Statement of Special Inspections

Statement Date: March 16, 2018
Project Name: Newberry Airport New Terminal Renovation and Expansion
Building Permit Number:
Project Address:
Design Professional in Responsible Charge (DPIRC):

The following information is being submitted in accordance with the Special Inspection provisions of the 2015 International Building Code. Attached is the Schedule of Special Inspections (SSI) required for this project. This completed form is required to be placed on the drawings for plan review. After permit issuance, a listing of the Special Inspection Firms (SIF) and the Designated Special Inspectors (DSI) for each inspection type will be attached to this form prior to scheduling the Pre-Construction Meeting with the governing authority. No work is permitted to be performed prior to the Special Inspections Pre-Construction Meeting..

The DSI is responsible for verifying all information on each document prior to signing/sealing
The DSI is responsible for verifying each document is the correct document
The DSI is responsible for correcting any documents that contain errors
The DSI is responsible for verifying all ASIs maintain current certifications during the course of the project, as failure to maintain current certifications may result in a voided document. At the conclusion of each individual Special Inspection type, the DSI will complete a Final Report

The Special Inspection program outlined herein, does not relieve the Contractor or any other entity of any contractual duties, including quality control, quality assurance, or safety. The Contractor is solely responsible for construction means, methods, and job site safety. Failure to adhere to the SI program as outlined herein may result in a stop work notice being issued by the Department.

Respectfully submitted,
The Design Professional in Responsible Charge,

Signature

SOUTH CAROLINA PROFESSIONAL ENGINEER No. 24588 CHRISTOPHER R. HENRY 3/14/18

Licensed Professional Seal

Instructions for completing the Schedule of Special Inspections Form

1. Indicate the Inspection Type (IT-#) required for this project per IBC Section 1704.
2. Indicate whether Special Inspections are Continuous (C), Periodic (P) or both, by checking the appropriate box.
3. Insure the scope meets IBC Section 1704 and other applicable standards for each Inspection Type.

The following Special Inspections are required for the project: (C-continuous, P=periodic)

IT-1 VERIFICATION OF SOILS (Refer to IBC Table 1705.6)

Check if required	Inspection Task	C	P	Standard	Notes / Comments
☒	Verify materials below shallow foundation are adequate to achieve the design bearing capacity	☐	☒	Table 1705.6, #1	
☒	Perform classification and testing of compacted fill materials	☐	☒	Table 1705.6, #3	

IT-2 EXCAVATION AND FILL (Refer to IBC Table 1705.6)

Check if required	Inspection Task	C	P	Standard	Notes / Comments
☒	Verify excavations are extended to proper depth and have reached proper material	☐	☒	Table 1705.6, #2	
☒	Verify use of proper materials, densities and lift thickness during placement and compaction of compacted nil	☒	☐	Table 1705.6, #4	
☒	Prior to placement of compacted fill, observe sub-grade and verify that site has been prepared properly	☐	☒	Table 1705.6, #5	

IT-5 REINFORCED CONCRETE (Refer to IBC Table 1705.3)

Check if required	Inspection Task	C	P	Standard	Notes / Comments
☒	Inspection of reinforcing steel, including pre-stressing tendons and placement	☐	☒	ACI 318: Ch.20, 25.2, 25.3, 26.6.1-26.6.3; IBC 1908.4	
☒	Inspection of reinforcing steel welding in accordance with 1705.3.1 and ASTM A706	☒	☐	AWS D1.4; ACI 318:26.6.4	
☒	Inspection of bolts to be installed in concrete prior to and during placement of concrete where allowable loads have been increased or where strength design is used.	☒	☐	ACI 318: 17.8.2.4, 17.8.2	
☒	Inspection of anchors installed in hardened concrete	☐	☒	ACI 318: 17.8.2,	
☒	Verifying use of required design mix	☐	☒	ACI 318: Ch. 19, 26.4.3, 26.4.4; IBC 1904.1, 1904.2, 1908.2, 1908.3	
☒	At the time fresh concrete is sampled to fabricate specimens for strength test, perform slump and air content tests, and determine the temperature of the concrete	☒	☐	ASTM C 172; ASTM C 31; ACI 318: 26.4, 26.12; IBC 1908.10	
☒	Inspection of concrete and shotcrete placement for proper application techniques	☒	☐	ACI 318: 26.5; IBC 1908.6, 1908.7, 1908.8	
☒	Inspection for maintenance of specified curing temperature and techniques	☐	☒	ACI 318: 26.5.3-26.5.5 IBC 1908.9	
☐	Inspection of prestressed concrete: a. Application of pre-stressing forces. b. Grouting of bonded pre-stressing tendons in the seismic-force-resisting system	 ☐ ☐	 ☐ ☐	ACI 318: 26.10	
☐	Erection of precast concrete members	☐	☐	ACI 318: 26.8	
☐	Verification of in-situ concrete strength, prior to stressing of tendons in post-tensioned concrete and prior to removal of shores and forms from beams and structural slabs	☐	☐	ACI 318: 26.11.2	
☐	Inspect formwork for shape, location and dimensions of the concrete members formed	☐	☐	ACI 318: 26.11.1.2(b)	

IT-14 SPRAYED FIRE-RESISTANT MATERIALS

Check if required	Inspection Task	C	P	Standard	Notes / Comments
☐	Spray applied fire-resistant materials	☐	☐	1705.14	Inspect surface conditions, application, thickness, density, and bond strength in accordance with 1704.12
☐	Mastic and intumescent fire resistive coatings	☐	☐	1705.15	

IT-15 EXTERIOR INSULATION AND FINISH SYSTEM (EIFS)

Check if required	Inspection Task	C	P	Standard	Notes / Comments
☐	EIFS	☐	☐	1705.16	

IT-16 SEISMIC RESISTANCE

Check if required	Inspection Task	C	P	Standard	Notes / Comments
☒	A quality assurance plan with seismic requirements shall be provided in accordance with Section 1704.	☐	☒	1705.12	

IT-17 SMOKE CONTROL

Check if required	Inspection Task	C	P	Standard	Notes / Comments
☐	Inspection of smoke control system	☐	☐	1705.18	

IT-18 WOOD

Check if required	Inspection Task	C	P	Standard	Notes / Comments
☒	Inspection of fabricators to be in accordance with the requirements set forth in IBC Section 1704.2.5	☐	☒	1704.2.5	
☒	Temp & permanent bracing on metal-plate-connected trusses spanning >60'	☐	☒	1705.5.2	
☒	High load diaphragms and shear walls	☐	☒	1705.5.1, 2306.2 1704.2	Inspect grade and thickness of structural sheathing. Verify nominal size of framing members, the nail diameter and length, the number of fastener lines, spacing, and edge distances are in conformance with contract documents

SEISMIC QUALITY ASSURANCE PLAN

1. THIS PROJECT IS SUBJECT TO THE REQUIREMENTS OF SECTION 1704 OF THE INTERNATIONAL BUILDING CODE.
2. THE SEISMIC FORCE RESISTING SYSTEM IDENTIFIED IN THESE NOTES UNDER "DESIGN CRITERIA," NOTE 5, WHICH INCLUDES THE FOLLOWING COMPONENTS:
   MASONRY SHEARWALLS
   ARE SUBJECT TO THIS QUALITY ASSURANCE PLAN.
3. EACH CONTRACTOR RESPONSIBLE FOR CONSTRUCTION OF THE SEISMIC-FORCE-RESISTING SYSTEM OR COMPONENTS IDENTIFIED ABOVE SHALL SUBMIT A COMPLETED "CONTRACTOR'S STATEMENT OF RESPONSIBILITY" TO THE PROJECT SPECIAL INSPECTOR, BUILDING OFFICIAL, AND THE OWNER. A COPY OF THE STATEMENT CAN BE OBTAINED FROM THE PROJECT SPECIAL INSPECTOR AND WILL CONTAIN THE FOLLOWING:
   A. ACKNOWLEDGMENT OF AWARENESS OF THE SPECIAL REQUIREMENTS CONTAINED WITHIN THE QUALITY ASSURANCE PLAN.
   B. ACKNOWLEDGMENT THAT CONTROL WILL BE EXERCISED TO OBTAIN CONFORMANCE WITH THE CONSTRUCTION DOCUMENTS APPROVED BY THE BUILDING OFFICIAL.
   C. PROCEDURES FOR EXERCISING THAT CONTROL WITHIN THE CONTRACTOR'S ORGANIZATION, THE METHOD AND FREQUENCY OF REPORTING, AND THE DISTRIBUTION OF THE REPORTS.
   D. IDENTIFICATION AND QUALIFICATIONS OF THE PERSON(S) EXERCISING SUCH CONTROL AND THEIR POSITION(S) IN THE ORGANIZATION.
4. IN ADDITION TO ALL INSPECTIONS REQUIRED BY THE PROJECT'S STATEMENT OF SPECIAL INSPECTIONS, THE FOLLOWING INSPECTIONS ARE REQUIRED TO BE PERFORMED BY THE PROJECT SPECIAL INSPECTOR OR INSPECTING AGENTS:
   A. CONTINUOUS SPECIAL INSPECTION OF STRUCTURAL WELDING OF COMPONENTS OF THE SEISMIC-FORCE RESISTING SYSTEM IN ACCORDANCE WITH AISC SEISMIC PROVISIONS, WITH THE EXCEPTION OF SINGLE PASS FILLET WELDS NOT EXCEEDING 5/16" AND ALL ROOF AND FLOOR DECK WELDING.
   B. ANCHORAGE OF ELECTRICAL EQUIPMENT USED FOR EMERGENCY OR STANDBY POWER SYSTEMS.
   C. EQUIPMENT USING COMBUSTIBLE ENERGY SOURCES.
   D. ELECTRICAL MOTORS, TRANSFORMERS, SWITCHGEAR UNIT SUB-STATIONS AND MOTOR CONTROL CENTERS.
   E. RECIPROCATING AND ROTARY TYPE MACHINERY.
   F. PIPING DISTRIBUTION SYSTEMS 3 INCHES (76 mm) AND LARGER.
   G. TANKS, HEAT EXCHANGERS AND PRESSURE VESSELS.
   H. PIPING SYSTEMS AND MECHANICAL UNITS CONTAINING FLAMMABLE, COMBUSTIBLE, OR HIGHLY TOXIC MATERIALS.
   I. HEATING, VENTILATING AND AIR-CONDITIONING (HVAC) DUCTWORK CONTAINING HAZARDOUS MATERIALS AND ANCHORAGE OF SUCH DUCTWORK.
5. IN ADDITION TO ALL TESTING REQUIRED BY THE PROJECT SPECIFICATIONS THE FOLLOWING TESTING MUST BE PERFORMED:
   A. THE CONTRACTOR SHALL SUBMIT CERTIFICATES OF COMPLIANCE FOR ALL MATERIALS USED IN MASONRY CONSTRUCTION STATING THAT THE MATERIALS COMPLY WITH THE CONTRACT DOCUMENTS TO THE PROJECT SPECIAL INSPECTOR.
   B. VERIFICATION OF MASONRY COMPRESSIVE STRENGTH (f'm) PRIOR TO CONSTRUCTION USING THE UNIT STRENGTH METHOD OR PRISM TEST METHOD PER ACI 530.
   C. THE CONTRACTOR SHALL SUBMIT CERTIFIED MILL TEST REPORTS FOR EACH SHIPMENT OF REINFORCING STEEL TO BE USED IN ALL MASONRY SHEARWALLS TO THE PROJECT SPECIAL INSPECTOR.

SPECIAL INSPECTIONS REPORTING REQUIREMENTS:

1. EACH SPECIAL INSPECTOR TO LEAVE A WRITTEN COPY OF THEIR DAILY REPORT ON SITE, INITIALED BY THE CONTRACTOR, AND ENTERED IN THE DAILY INSPECTION LOG MAINTAINED BY THE GENERAL CONTRACTOR. ANY CORRECTIONS OR DISCREPANCIES WILL BE REVIEWED BY THE SPECIAL INSPECTOR AND THE GENERAL CONTRACTOR PRIOR TO LEAVING SITE.
2. EACH DAILY REPORT MUST DESCRIBE THE AREA OF THE INSPECTION, THE STRUCTURAL ITEMS INSPECTED, A BRIEF DESCRIPTION OF WHAT WAS BUILT, AND IF IT WAS IN CONFORMANCE WITH THE CONSTRUCTION DOCUMENTS.
3. CORRECTION ITEMS NOT CORRECTED BEFORE THE SPECIAL INSPECTOR LEAVES THE SITE BUT DO NOT REQUIRE INPUT FROM THE DESIGN TEAM WILL REQUIRE A SEPARATE CORRECTION NOTICE WHICH WILL BE GIVEN TO THE GENERAL CONTRACTOR AND INCLUDED IN THE MONTHLY REPORT. THIS IS TO BE A SEPARATE REPORT FROM THE DAILY REPORT. THE CORRECTION WILL BE ADDED TO THE CORRECTION LOG.
4. ITEMS WHICH ARE DISCREPANCIES AND REQUIRE INPUT FROM THE DESIGN TEAM WILL REQUIRE IN A SEPARATE DISCREPANCY NOTICE GIVEN TO THE GENERAL CONTRACTOR, ENGINEER OF RECORD, AND ARCHITECT OF RECORD. THIS IS TO BE A SEPARATE REPORT FROM THE DAILY REPORT. THE DISCREPANCY WILL BE ADDED TO THE DISCREPANCY LOG.
5. ALL CORRECTIONS AND DISCREPANCY ITEMS ON THE LOGS WILL REMAIN ON THE LOG UNTIL RESOLVED. WHEN THE ITEMS ARE RESOLVED THE LOG OR THE NOTICES ARE TO INDICATE HOW AND WHEN THE ITEM WAS RESOLVED.
6. A MONTHLY REPORT WILL BE PROVIDED WHICH WILL INCLUDE THE FIELD REPORTS FOR THAT MONTH, THE CORRECTIONS, CORRECTION LOG, DISCREPANCY, AND THE DISCREPANCY LOG.
7. BOUND MONTHLY REPORT TO BE SUBMITTED TO THE GENERAL CONTRACTOR, ENGINEER OF RECORD, ARCHITECT OF RECORD, OWNER AND BUILDING OFFICIAL WITHIN THE FIRST WEEK OF THE MONTH.
8. UPON COMPLETION OF THE CONSTRUCTION OF THE ITEMS SPECIFIED IN THE STATEMENT OF SPECIAL INSPECTIONS, COMPLETION OF ALL MATERIAL TESTS, AND CORRECTION OF ALL OPEN DISCREPANCIES, THE SPECIAL INSPECTOR SHALL SUBMIT A SIGNED AND SEALED FINAL STATEMENT OF SPECIAL INSPECTIONS STATING THAT THE CONSTRUCTION HAS BEEN COMPLETED AND THAT ALL DISCOVERED DISCREPANCIES HAVE BEEN RESOLVED.

REQUIRED CERTIFICATIONS FOR EACH INSPECTION TYPE
EACH INSPECTOR PERFORMING THE INSPECTION TYPE TO SUBMIT CERTIFICATION TO THE ENGINEER OF RECORD PRIOR TO PERFORMING THE INSPECTION.

IT-01 VERIFICATION OF SOILS; IBC SECTIONS 1705.6 AND 1803.4
- CURRENT NICET LEVEL II CERTIFICATION IN GEOTECHNICAL ENGINEERING TECHNOLOGY/CONSTRUCTION; OR
- CURRENT NICET LEVEL II SOILS CERTIFICATE IN CONSTRUCTION MATERIALS TESTING; OR
- CURRENT ICC SOILS SPECIAL INSPECTOR CERTIFICATE; OR
- LICENSED GEOLOGIST WITH ONE YEAR RELATED EXPERIENCE; OR
- ENGINEER-IN-TRAINING (EIT) WITH ONE YEAR RELATED EXPERIENCE; OR
- GEOLOGIST-IN-TRAINING (GIT) WITH ONE YEAR RELATED EXPERIENCE

IT-02 EXCAVATION AND FILLING; IBC SECTIONS 1705.6, 1803.5
- CURRENT NICET LEVEL II CERTIFICATE IN GEOTECHNICAL ENGINEERING TECHNOLOGY/CONSTRUCTION; OR
- CURRENT NICET LEVEL II SOILS CERTIFICATE IN CONSTRUCTION MATERIALS TESTING; OR
- CURRENT ICC SOILS SPECIAL INSPECTOR CERTIFICATE; OR
- LICENSED GEOLOGIST WITH ONE YEAR RELATED EXPERIENCE; OR
- ENGINEER-IN-TRAINING (EIT) WITH ONE YEAR RELATED EXPERIENCE; OR
- GEOLOGIST-IN-TRAINING (GIT) WITH ONE YEAR RELATED EXPERIENCE

IT-05 REINFORCED CONCRETE; IBC SECTIONS 1705.3, 1905
- CURRENT ICC REINFORCED CONCRETE SPECIAL INSPECTOR CERTIFICATE; OR
- ACI CONCRETE CONSTRUCTION SPECIAL INSPECTOR CERTIFICATE; OR
- ENGINEER-IN-TRAINING (EIT) WITH ONE YEAR RELATED EXPERIENCE

IT-09 INSPECTION OF PRE-CAST CONCRETE FABRICATORS; IBC SECTION 1705.3
- CURRENT ICC REINFORCED CONCRETE CERTIFICATE; OR
- PRE-CAST/PRE-STRESSED CONCRETE INSTITUTE (PCI) QUALITY CONTROL TECHNICIAN/INSPECTOR LEVEL II CERTIFICATE

IT-10 INSPECTION OF STRUCTURAL STEEL FABRICATORS; AISC 360, 14TH ED.
- CURRENT AWS D1.1 CERTIFIED WELDING INSPECTOR; OR
- CURRENT CANADIAN WELDING BUREAU CERTIFIED WELDING INSPECTOR; OR
- CURRENT ICC STRUCTURAL STEEL AND WELDING CERTIFICATE PLUS ONE YEAR OF RELATED EXPERIENCE; OR
- CURRENT NDT LEVEL II (ALONG WITH IN-HOUSE LEVEL III TRAINER'S CERTIFICATE) OR LEVEL III

IT-11 STRUCTURAL MASONRY; ACI 530/ASCE 5
- CURRENT ICC STRUCTURAL MASONRY CERTIFICATE AND ONE YEAR OF RELATED EXPERIENCE; OR
- ENGINEER-IN-TRAINING (EIT) WITH ONE YEAR RELATED EXPERIENCE

IT-12 WELDING; AISC 360, 14TH ED
- CURRENT AWS D1.1 CERTIFIED WELDING INSPECTOR; OR
- CURRENT CANADIAN WELDING BUREAU CERTIFIED WELDING INSPECTOR; OR
- CURRENT ICC STRUCTURAL STEEL AND WELDING CERTIFICATE PLUS ONE YEAR OF RELATED EXPERIENCE; OR
- CURRENT NDT LEVEL II (ALONG WITH IN-HOUSE LEVEL III TRAINER'S CERTIFICATE) OR LEVEL III

IT-13 HIGH-STRENGTH BOLTING AND STEEL FRAME INSPECTION; AISC 360, 14TH ED
- CURRENT ICC STRUCTURAL STEEL & BOLTING CERTIFICATE PLUS ONE YEAR OF RELATED EXPERIENCE; OR
- ENGINEER-IN-TRAINING (EIT) WITH ONE YEAR RELATED EXPERIENCE

IT-16 SEISMIC RESISTANCE; IBC SECTIONS 1705.10, 1705.11
- PROFESSIONAL ENGINEER OR ARCHITECT REGISTERED IN THE STATE OF SOUTH CAROLINA; OR
- ANY ASI WORKING UNDER THE DIRECT SUPERVISION OF A QUALIFIED DSI. THE DSI IS TO INSURE THE ASI IS QUALIFIED TO INSPECT THE TYPE OF WORK BEING REVIEWED.

NEWBERRY COUNTY AIRPORT
TERMINAL RENOVATION & EXPANSION

ARCHITECT
THE WILSON GROUP
P O BOX 5510
CHARLOTTE, NC 28299
(704) 331-9747

PROJECT MANAGER & CIVIL ENGINEER
TALBERT, BRIGHT & ELLINGTON
2000 PARK STREET, SUITE 101
COLUMBIA, NC 29201
(803) 933-9290

STRUCTURAL ENGINEER
STEWART
101 N. TRYON ST., SUITE 1400
CHARLOTTE, NC 28202
(704) 909-3523 FIRM NO.: C-1051

MECHANICAL, ELECTRICAL & PLUMBING ENGINEER
SABER ENGINEERING
2923 S. TRYON ST., SUITE 280
CHARLOTTE, NC 28203
(704) 373-0068

SOUTH CAROLINA PROFESSIONAL ENGINEER No. 24588 CHRISTOPHER R. HENRY 5/1/2018

REVISIONS

DATE MAY 1, 2018
PROJECT NUMBER 9198-000
SHEET TITLE
SPECIAL INSPECTIONS
SHEET NUMBER
S-011

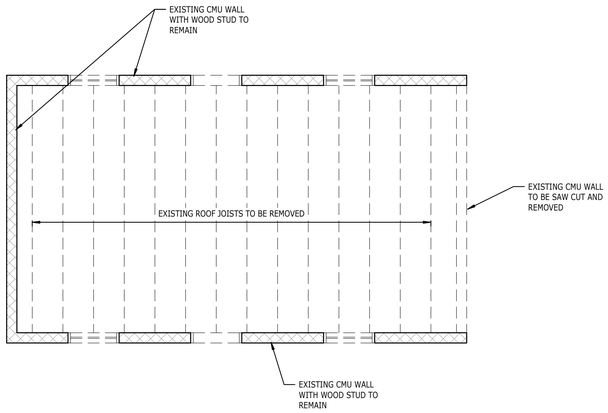

2 S-100 ROOF DEMOLITION PLAN
1/4" = 1'-0"

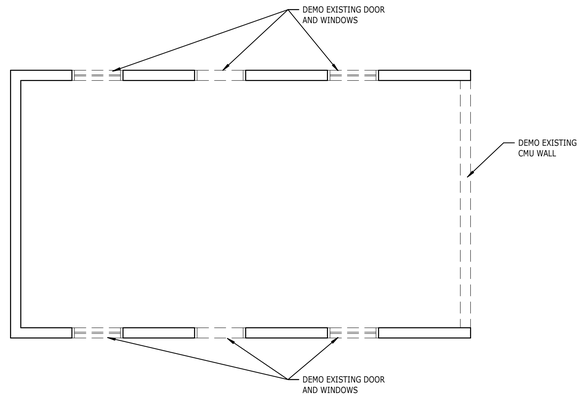

1 S-100 FIRST LEVEL DEMOLITION PLAN
1/4" = 1'-0"

NEWBERRY COUNTY AIRPORT

TERMINAL RENOVATION & EXPANSION

ARCHITECT

THE WILSON GROUP

P O BOX 5510
CHARLOTTE, NC 28299
(704) 331-9747

PROJECT MANAGER & CIVIL ENGINEER

TALBERT, BRIGHT & ELLINGTON

2000 PARK STREET, SUITE 101
COLUMBIA, NC 29201
(803) 933-9290

STRUCTURAL ENGINEER

STEWART

101 N. TRYON ST., SUITE 1400
CHARLOTTE, NC 28202
(704) 909-3523 FIRM NO.: C-1051

MECHANICAL, ELECTRICAL & PLUMBING ENGINEER

SABER ENGINEERING

2923 S. TRYON ST., SUITE 280
CHARLOTTE, NC 28203
(704) 373-0068

5/1/2018

REVISIONS

DATE	MAY 1, 2018
PROJECT NUMBER	9198-000

SHEET TITLE

DEMOLITION PLANS

SHEET NUMBER

S-100

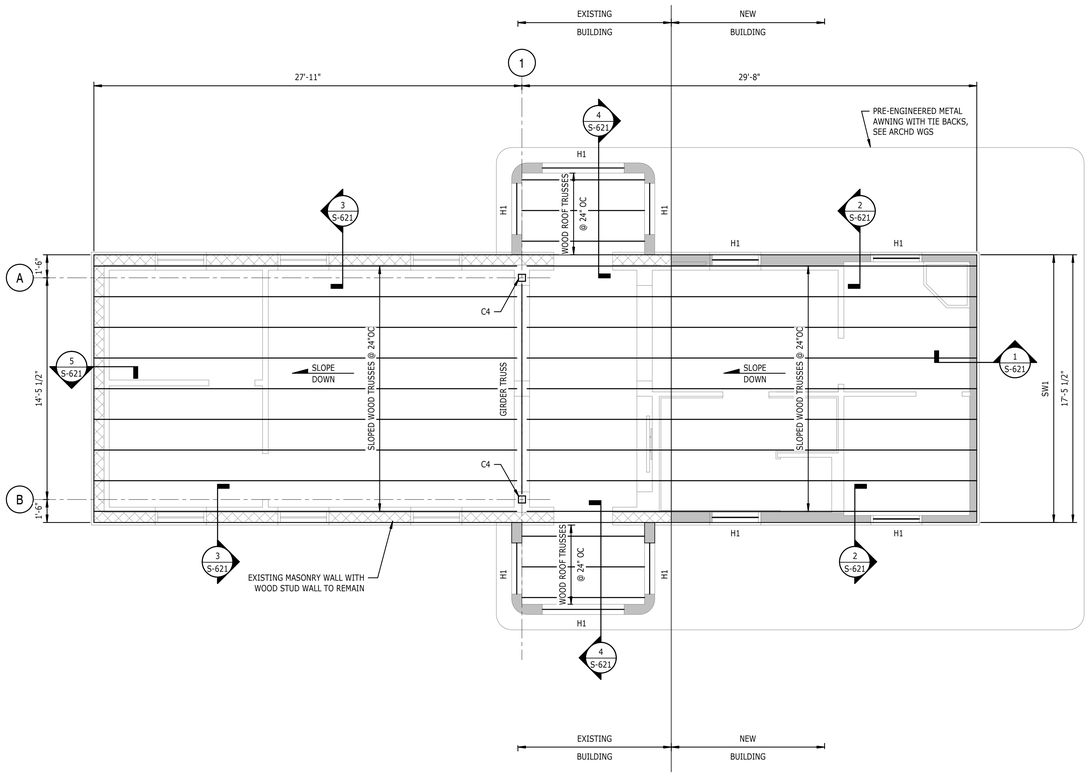

2 S-101 ROOF FRAMING PLAN

1/4" = 1'-0"

NOTES:

1. FOR GENERAL NOTES AND ABBREVIATIONS, SEE S-001.
2. ROOF TRUSS BEARING ELEVATION 10'-6" ABOVE REFERENCE FINISHED FLOOR ELEVATION, UNO. (No) INDICATES TRUSS BEARING ELEVATION.
3. ——— INDICATES ROOF TRUSSES SPACED @24"OC, UNO.
4. PROVIDE DOUBLE STUDS UNDER ALL WOOD HEADER, BEAM, HIP TRUSS, AND TRUSS GIRDER BEARING LOCATIONS, UNO.
5. "C#" INDICATES WOOD COLUMN, SEE 2/S-601. ALL SUPPORTING COLUMNS ARE TO BE EXTENDED TO THE FOUNDATION LEVEL.
6. "H#" INDICATES WOOD HEADER BEAM, SEE 3/S-601 FOR SCHEDULE.
7. DIMENSIONS ARE TO OUTSIDE FACE OF FRAMING, UNO. REFER TO ARCHITECTURAL DRAWINGS FOR ALL WALL LOCATIONS AND DIMENSIONS.
8. SEE ARCHITECTURAL DRAWINGS FOR ALL ROOF SLOPES.
9. FOR TYPICAL ROOF FRAMING DETAILS, SEE S-601 AND S-602.

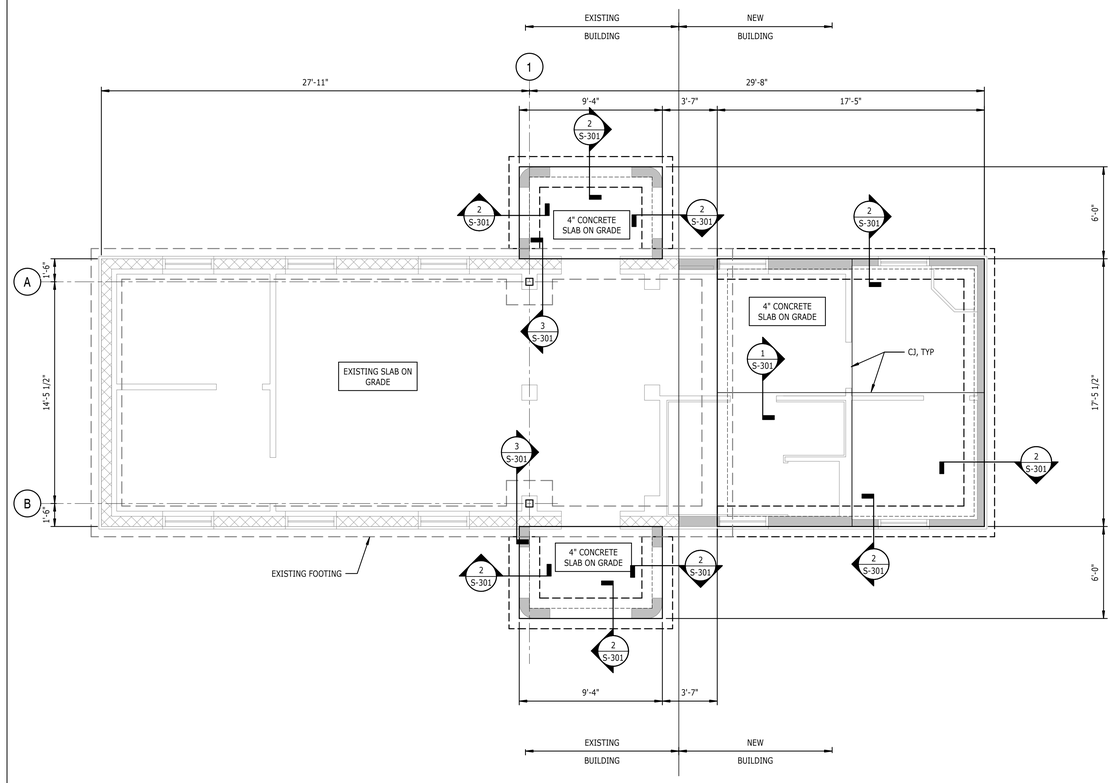

1 S-101 FOUNDATION PLAN

1/4" = 1'-0"

NOTES:

1. FOR GENERAL NOTES AND ABBREVIATIONS, SEE S-001.
2. FINISHED FLOOR ELEVATION 564.36', UNO. REFERENCE ELEVATION 0'-0".
3. (No) INDICATES DEPRESSED OR RAISED SLAB ELEVATION, SEE PLAN.
4. TOP OF FOOTING 1'-4" BELOW FINISHED FLOOR ELEVATION, UNO. <No> INDICATES TOP OF FOOTING ELEVATION, SEE PLAN.
5. FOR TYPICAL SLAB CONSTRUCTION DETAILS, SEE 1/S-301
6. DIMENSIONS ARE TO OUTSIDE FACE OF FRAMING, UNO. REFER TO ARCHITECTURAL DRAWINGS FOR ALL WALL LOCATIONS AND DIMENSIONS.
7. SLOPE EXTERIOR SLABS, SIDEWALKS, AND PAVING AS INDICATED ON THE ARCHITECTURAL DRAWINGS.

NEWBERRY COUNTY AIRPORT

TERMINAL RENOVATION & EXPANSION

ARCHITECT

THE WILSON GROUP

P O BOX 5510
CHARLOTTE, NC 28299
(704) 331-9747

PROJECT MANAGER & CIVIL ENGINEER

TALBERT, BRIGHT & ELLINGTON

2000 PARK STREET, SUITE 101
COLUMBIA, NC 29201
(803) 933-9290

STRUCTURAL ENGINEER

STEWART

101 N. TRYON ST., SUITE 1400
CHARLOTTE, NC 28202
(704) 909-3523 FIRM NO.: C-1051

MECHANICAL, ELECTRICAL & PLUMBING ENGINEER

SABER ENGINEERING

2923 S. TRYON ST., SUITE 280
CHARLOTTE, NC 28203
(704) 373-0068

SOUTH CAROLINA PROFESSIONAL ENGINEER No. 24588 CHRISTOPHER R. HUNSICKER

5/1/2018

REVISIONS

DATE	MAY 1, 2018
PROJECT NUMBER	9198-000

SHEET TITLE

FOUNDATION & ROOF FRAMING PLANS

SHEET NUMBER

S-101

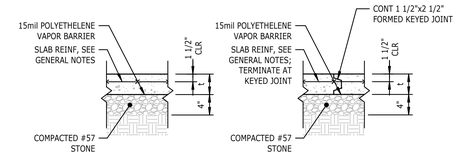

TYPICAL CONSTRUCTION

CONSTRUCTION JOINT
AT POUR BREAK

1 / S-301 DETAIL
TYPICAL SLAB ON GRADE
NTS

NOTES:
1. 't' DENOTES SLAB THICKNESS, SEE PLANS.
2. LOCATION OF SLAB ON GRADE CONSTRUCTION JOINTS SHALL BE DETERMINED BY THE CONTRACTOR. JOINT LOCATIONS SHALL BE SUBMITTED TO THE ENGINEER FOR APPROVAL PRIOR TO CONSTRUCTION.
3. SEE PLANS FOR LOCATION OF CONTROL JOINTS. WHERE NOT SHOWN ON PLAN, CONTACT THE ENGINEER.
4. SAW CUT CONTROL JOINTS WITHIN 8 HOURS OF SLAB POUR.
5. ALL SILL PLATES IN CONTACT WITH CONCRETE, MASONRY, OR STEEL SHALL BE PRESSURE-TREATED. ANCHOR INTERIOR WALL SILL PLATES TO SLAB WITH (1)0.145"Ø x2 7/8" HILTI X-CP FASTENER (OR EQUAL) @24"OC, MAXIMUM UNO.

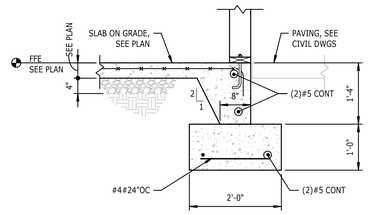

2 / S-301 SECTION
3/4" = 1'-0"

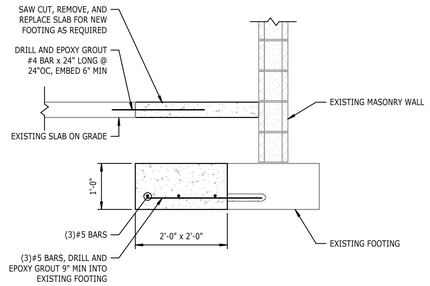

3 / S-301 SECTION
3/4" = 1'-0"

NEWBERRY COUNTY AIRPORT
TERMINAL RENOVATION & EXPANSION

ARCHITECT
THE WILSON GROUP
P O BOX 5510
CHARLOTTE, NC 28299
(704) 331-9747

PROJECT MANAGER & CIVIL ENGINEER
TALBERT, BRIGHT & ELLINGTON
2000 PARK STREET, SUITE 101
COLUMBIA, NC 29201
(803) 933-9290

STRUCTURAL ENGINEER
STEWART
101 N. TRYON ST., SUITE 1400
CHARLOTTE, NC 28202
(704) 909-3523 FIRM NO.: C-1051

MECHANICAL, ELECTRICAL & PLUMBING ENGINEER
SABER ENGINEERING
2923 S. TRYON ST., SUITE 280
CHARLOTTE, NC 28203
(704) 373-0068

5/1/2018

REVISIONS

DATE	MAY 1, 2018
PROJECT NUMBER	9198-000

SHEET TITLE
DETAILS & SECTIONS

SHEET NUMBER
S-301

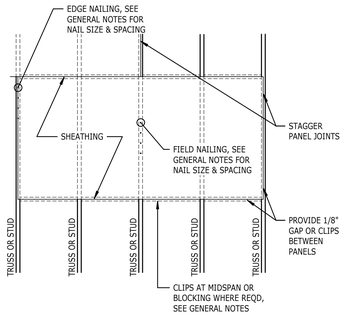

10 S-601 DETAIL
NAILING PATTERN FOR SHEATHING
NTS

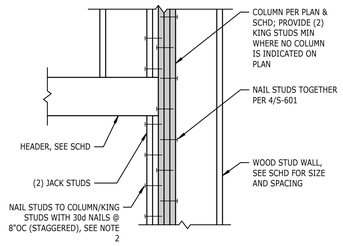

7 S-601 DETAIL
TYPICAL HEADER AT BEARING AND EXTERIOR WALLS
NTS

NOTES:
1. THIS DETAIL APPLIES TO ALL HEADERS IN BEARING WALLS AND EXTERIOR WALLS.
2. AT CONTRACTOR'S OPTION, IN LIEU OF 30d NAILS, IT IS ACCEPTABLE TO PROVIDE SIMPSON SDWS 1/4"x4 1/2" SCREWS (OR APPROVED EQUAL) AT SAME SPACING AS INDICATED ABOVE.

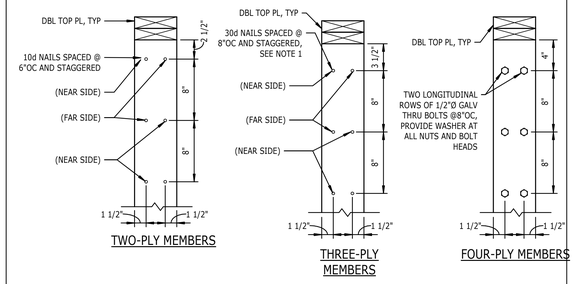

4 S-601 DETAIL
NAILING PATTERN AT BUILT-UP POST (2x6 WALL)
1 1/2" = 1'-0"

NOTES:
1. AT CONTRACTOR'S OPTION, IN LIEU OF 30d NAILS, IT IS ACCEPTABLE TO PROVIDE SIMPSON SDWS 1/4"x4 1/2" SCREWS (OR APPROVED EQUAL) AT SAME SPACING AS INDICATED ABOVE.
2. BOLT OR SCREWS SHALL BE TIGHTENED TO ENSURE FACES OF ADJACENT LAMINATIONS ARE IN CONTACT.

WALL CONSTRUCTION SCHEDULE		
GROUND FLOOR		
WALL TYPE	STUD SPACING (No 2 GRADE SPF)	MID-POINT BLOCKING
EXTERIOR	(1)2x6 @16"OC	NO
EXTERIOR SHEAR WALL	(1)2x6 @16"OC	NO
INTERIOR NON-LOAD BEARING	(1)2x4 @24"OC	NO

1 S-601 SCHEDULE
WALL CONSTRUCTION SCHEDULE
NTS

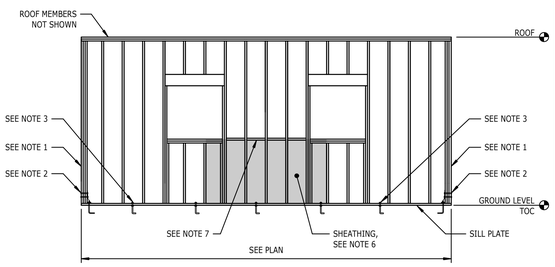

11 S-601 DETAIL
TYPICAL SHEAR WALL - ONE STORY BUILDING
NTS

NOTES:
1. END POST, SEE SHEAR WALL SCHEDULE.
2. HOLDOWN ANCHORS ARE SPECIFIED IN THE SHEAR WALL SCHEDULE FOR EACH SHEAR WALL TYPE.
3. BOTTOM SILL PLATE TO FOUNDATION CONNECTORS: PROVIDE ANCHORS AS SPECIFIED IN THE SHEAR WALL SCHEDULE.
4. SHEAR WALL ELEVATION (SHOWN ABOVE) VARIES. REFER TO PLANS AND ARCHITECTURAL DRAWINGS.
5. SHEAR WALLS ARE DENOTED "SW#" ON PLANS.
6. SEE SHEAR WALL SCHEDULE FOR SHEATHING. SHEATHING SHALL BE LAID WITH LONG DIMENSION PERPENDICULAR TO STUD WALL.
7. PANEL SHEATHING JOINTS IN SHEAR WALLS SHALL OCCUR OVER STUDS OR BLOCKING. ADJACENT PANEL SHEATHING JOINTS SHALL OCCUR OVER AND BE NAILED TO COMMON FRAMING MEMBER.

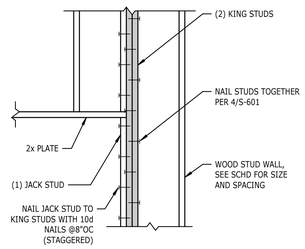

8 S-601 DETAIL
TYPICAL HEADER AT INTERIOR NON-LOAD BEARING WALLS
NTS

NOTES:
1. THIS DETAIL APPLIES ONLY TO HEADERS IN INTERIOR NON-LOAD BEARING WALLS, SEE ARCHITECTURAL DRAWINGS FOR LOCATIONS.

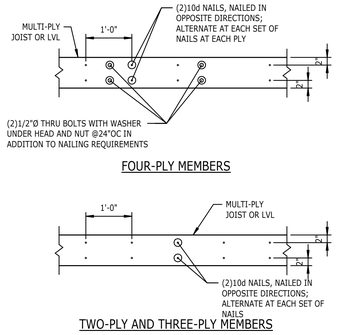

5 S-601 DETAIL
NAILING PATTERN AT MULTI-PLY JOIST
3/4" = 1'-0"

WOOD COLUMN SCHEDULE			
MARK	C3	C4	C5
SIZE	(3)2x6	(4)2x6	3 1/2x 3 1/2 PSL

NOTES:
1. SEE GENERAL NOTES FOR WOOD PROPERTIES.
2. NAIL BUILT-UP COLUMNS PER 4/S-601.
3. PROVIDE DOUBLE STUDS (MINIMUM) AT ALL HEADERS, HIP TRUSSES, AND TRUSS GIRDER SUPPORTS, UNO.
4. PROVIDE MID-POINT BLOCKING WITHIN WALL EACH SIDE OF COLUMN.
5. "PSL" DENOTES PARALLEL STRAND LUMBER.

2 S-601 SCHEDULE
WOOD COLUMN SCHEDULE
NTS

WOOD SHEAR WALL SCHEDULE									
MARK	SHEATHING TYPE	NAIL TYPE	NAIL SPACING			END CONDITION			SILL PLATE ANCHORAGE AND SPACING
			PANEL EDGE	AROUND OPENINGS	PANEL FIELD	END POST	HOLDOWN	DETAIL	
SW1	7/16" OSB	8d	6"OC	6"OC	12"OC	(2)2x6	HDU2	2/S-602	1/2"Ø AB @32"OC

12 S-601 SCHEDULE
WOOD SHEAR WALL SCHEDULE
NTS

NOTES:
1. SEE FRAMING PLANS FOR SHEAR WALL LOCATIONS.
2. ALL HOLDOWN TYPES REFER TO SIMPSON STRONG-TIE MODEL NUMBERS.
3. SHEATHING PANELS ARE APPLIED WITH LONG DIMENSION ACROSS STUDS.
4. WHERE SHEATHING IS REQUIRED ON BOTH SIDES OF WALL, PANEL JOINTS SHALL BE OFFSET TO FALL ON DIFFERENT FRAMING MEMBERS.

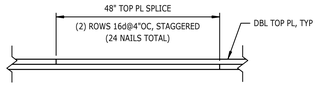

6 S-601 DETAIL
TYPICAL TOP PLATE SPLICE
NTS

WOOD HEADER SCHEDULE	
MARK	SIZE
H1	(3)2x10

WOOD SILL SCHEDULE	
SIZE	MAXIMUM OPENING
(1)2x6	5'-0"

THREE-PLY MEMBER

NOTES:
1. SEE GENERAL NOTES FOR WOOD PROPERTIES.
2. NAIL MULTI-PLY HEADERS PER 5/S-601.
3. PROVIDE DOUBLE STUDS (MINIMUM) AT ALL HEADERS, HIP TRUSSES, AND TRUSS GIRDER SUPPORTS, UNO.
4. ALL HEADERS AND SILLS FOR EXTERIOR AND LOAD BEARING WALLS SHALL BE AS SHOWN IN THE SCHEDULE, UNO ON PLAN.
5. PROVIDE WOOD SPACER AS REQUIRED TO MATCH WALL THICKNESS.
6. SEE 7/S-601 & 8/S-601 FOR HEADER SUPPORT.

3 S-601 SCHEDULE
WOOD HEADER AND SILL SCHEDULE
NTS

NEWBERRY COUNTY AIRPORT
TERMINAL RENOVATION & EXPANSION

ARCHITECT
THE WILSON GROUP
P O BOX 5510
CHARLOTTE, NC 28299
(704) 331-9747

PROJECT MANAGER & CIVIL ENGINEER
TALBERT, BRIGHT & ELLINGTON
2000 PARK STREET, SUITE 101
COLUMBIA, NC 29201
(803) 933-9290

STRUCTURAL ENGINEER
STEWART
101 N. TRYON ST., SUITE 1400
CHARLOTTE, NC 28202
(704) 909-3523 FIRM NO.: C-1051

MECHANICAL, ELECTRICAL & PLUMBING ENGINEER
SABER ENGINEERING
2923 S. TRYON ST., SUITE 280
CHARLOTTE, NC 28203
(704) 373-0068

SOUTH CAROLINA PROFESSIONAL ENGINEER No. 24588 STRITCHER & HENDRICKS
5/1/2018

REVISIONS

DATE MAY 1, 2018
PROJECT NUMBER 9198-000

SHEET TITLE
TYPICAL WOOD DETAILS & SCHEDULES

SHEET NUMBER
S-601

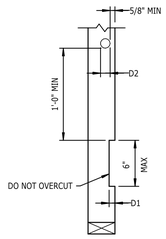

BEARING WALL		
STUD SIZE	NOTCH D1 (MAX)	HOLE D2 (MAX)
2x4	0"	3/4"
2x6	1 1/4"*	2"

NON-BEARING WALL		
STUD SIZE	NOTCH D1 (MAX)	HOLE D2 (MAX)
2x4	1 1/4"	2"
2x6	2"	3 1/4"

7 / S-602 DETAIL

ALLOWABLE HOLES AND NOTCHES IN STUDS
NTS

NOTES:
1. HOLE SIZE IN NON-BEARING WALLS MAY BE USED FOR BEARING WALLS IF STUDS ARE DOUBLED AT THESE LOCATIONS.
2. NOT MORE THAN TWO ADJACENT STUDS MAY BE BORED.
3. BORED HOLES SHALL NOT BE LOCATED AT THE SAME SECTION OF STUD AS A NOTCH. SEE MINIMUM SPACING GIVEN IN DETAIL ABOVE.
4. HOLES AND NOTCHES ARE NOT ALLOWED IN TOP AND BOTTOM PLATES OR END POSTS OF SHEAR WALLS.
5. HOLES IN TOP OR BOTTOM PLATES MORE THAN 40% OF THE PLATE WIDTH REQUIRE 16GA x1 1/2" WIDE METAL TIES WITH A MINIMUM (6)16d NAILS TO EACH PLATE.
6. * NOTCHES ARE NOT ALLOWED AT EXTERIOR 2x6 WALLS.

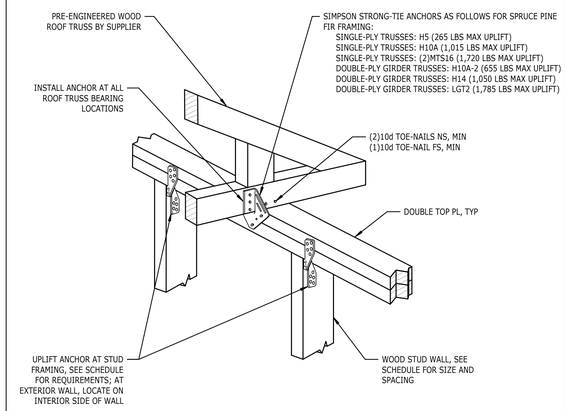

STUD UPLIFT ANCHOR REQUIREMENTS SPRUCE PINE FIR FRAMING, TRUSS SPACING @24"OC	
TRUSS REACTION	ANCHOR TYPE
LESS THAN 330 LBS	NONE
330 LBS TO 1,100 LBS	H2.5A
1,100 LBS TO 2,250 LBS	H2.5A PLUS H6
GREATER THAN 2,250 LBS	CONTACT ENGR

4 / S-602 DETAIL

TYPICAL ROOF TRUSS CONNECTION
NTS

NOTES:
1. MAXIMUM WALL STUD SPACING 16"OC.
2. CONTRACTOR TO SELECT TRUSS ANCHOR BASED ON APPROVED TRUSS SHOP DRAWINGS WITH TRUSS REACTIONS.
3. TRUSS MANUFACTURER OR CONTRACTOR SHALL REQUEST FOR ADDITIONAL HOLDOWN ANCHORS AT TRUSS GIRDER, MULTI-PLY TRUSSES, JACK TRUSSES, AND HIP AND VALLEY TRUSSES.
4. MULTIPLE ANCHORS MAY BE USED (PER SIMPSON STRONG-TIE RECOMMENDED CONSTRUCTION DETAILS) TO ACHIEVE HIGHER UPLIFT VALUES.

MINIMUM FASTENER REQUIREMENTS FOR FRAMING							
CONNECTION	NUMBER OR SPACING OF FASTENERS REQUIRED PER CONNECTION						
	3 1/2 x0.162	3 x0.148	3 1/4 x0.131	3 x0.131	2 1/2 x0.131	3 1/4 x0.120	3 x0.120
	CEILING AND ROOF FRAMING						
CEILING JOIST TO PLATE	3	4	5	5	5	5	5
CEILING JOISTS, LAPS OVER PARTITIONS	3	4	4	4	6	4	4
CEILING JOIST TO PARALLEL RAFTER	3	4	4	4	6	4	4
ROOF RAFTER TO PLATE	3	3	3	3	3	4	4
	WALL FRAMING						
TOP OR SOLE PLATE TO STUD, END NAILED	2	3	3	3	5	4	4
STUD TO TOP OR SOLE PLATE, TOE NAILED	3	4	4	4	4	4	4
CAP/TOP PLATE LAPS AND INTERSECTIONS (EACH SIDE OF LAP)	2	3	3	3	4	3	3
DIAGONAL BRACING	2	2	2	2	2	3	3
SOLE PLATE TO JOIST OR BLOCKING AT BRACED PANELS (NUMBER PER 16' JOIST SPACE)	2	3	3	4	NA	4	4
DOUBLE TOP PLATE	16"OC	16"OC	12"OC	12"OC	8"OC	12"OC	12"OC
DOUBLE STUDS	12"OC	12"OC	8"OC	8"OC	6"OC	8"OC	8"OC
CORNER STUDS	24"OC	16"OC	16"OC	16"OC	8"OC	12"OC	12"OC

5 / S-602 DETAIL

MINIMUM FASTENER REQUIREMENTS FOR FRAMING
NTS

NOTES:
1. NAIL LENGTHS SHOWN ARE A MINIMUM NOMINAL LENGTH (IN INCHES). NAIL SHANK DIAMETERS SHOWN ARE A MINIMUM NOMINAL DIAMETER (IN INCHES).
2. THIS FASTENING SCHEDULE APPLIES TO FRAMING MEMBERS HAVING AN ACTUAL THICKNESS OF 1 1/2" (NOMINAL 2x LUMBER).
3. FASTENINGS LISTED ABOVE MAY ALSO BE USED FOR OTHER CONNECTIONS THAT ARE NOT LISTED BUT THAT HAVE THE SAME CONFIGURATION AND THE SAME CODE REQUIREMENT FOR FASTENER QUANTITY/SPACING AND FASTENER SIZE (PENNYWEIGHT AND STYLE).
4. WHERE OTHER DRAWING OR SPECIFICATION REQUIREMENTS CONFLICT WITH THIS SCHEDULE, THE MORE STRINGENT REQUIREMENT SHALL APPLY.

ANCHOR ROD EMBEDMENT			
HOLDOWN	DIAMETER	MINIMUM EMBEDMENT	
		EDGE	INTERIOR
HDU2	5/8"	9 1/2"	5"

1 / S-602 SCHEDULE

ANCHOR ROD EMBEDMENT SCHEDULE
NTS

NOTES:
1. SEE 11/S-601 FOR HOLDOWN LOCATIONS.
2. ALL HOLDOWN TYPES REFER TO SIMPSON STRONG-TIE MODEL NUMBER.
3. ALL ANCHORS SET IN SIMPSON ET-HP EPOXY ADHESIVE, UNO. (*) DENOTES ANCHORS SET IN SIMPSON SET EPOXY ADHESIVE.
4. EDGE DISTANCE BASED ON DIMENSION FROM CENTER OF ANCHOR TO EDGE OF CONCRETE OF 1 3/4" AND 5" AT CORNER. (*) DENOTES ANCHORS LIMITED TO ONLY ONE EDGE.

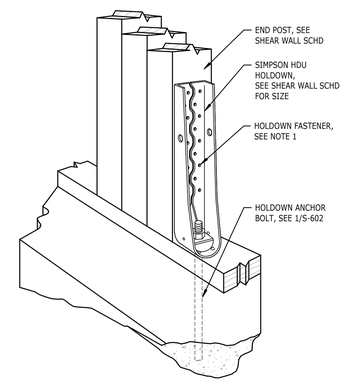

2 / S-602 DETAIL

SIMPSON STRONG-TIE - "HDU" HOLDOWN AT FOUNDATION
NTS

NOTES:
1. SEE MANUFACTURER'S CATALOG FOR REQUIRED FASTENER SIZES AND QUANTITIES.

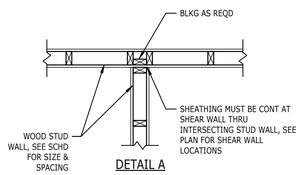

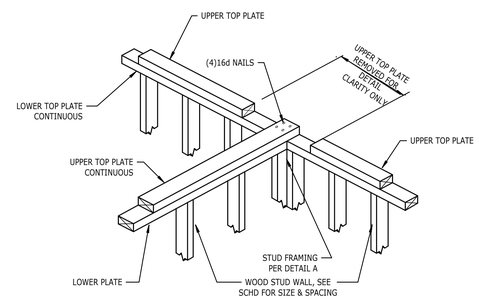

3 / S-602 DETAIL

TYPICAL INTERSECTION OF INTERIOR STUD WALLS
NTS

NEWBERRY COUNTY AIRPORT
TERMINAL RENOVATION & EXPANSION

ARCHITECT

THE WILSON GROUP
P O BOX 5510
CHARLOTTE, NC 28299
(704) 331-9747

PROJECT MANAGER & CIVIL ENGINEER
TALBERT, BRIGHT & ELLINGTON
2000 PARK STREET, SUITE 101
COLUMBIA, NC 29201
(803) 933-9290

STRUCTURAL ENGINEER
STEWART
101 N. TRYON ST., SUITE 1400
CHARLOTTE, NC 28202
(704) 909-3523 FIRM NO.: C-1051

MECHANICAL, ELECTRICAL & PLUMBING ENGINEER
SABER ENGINEERING
2923 S. TRYON ST., SUITE 280
CHARLOTTE, NC 28203
(704) 373-0068

SOUTH CAROLINA PROFESSIONAL ENGINEER No. 24588 CHRISTOPHER B. HUGHES
5/1/2018

REVISIONS

DATE MAY 1, 2018
PROJECT NUMBER 9198-000

SHEET TITLE
TYPICAL WOOD DETAILS & SCHEDULES

SHEET NUMBER
S-602

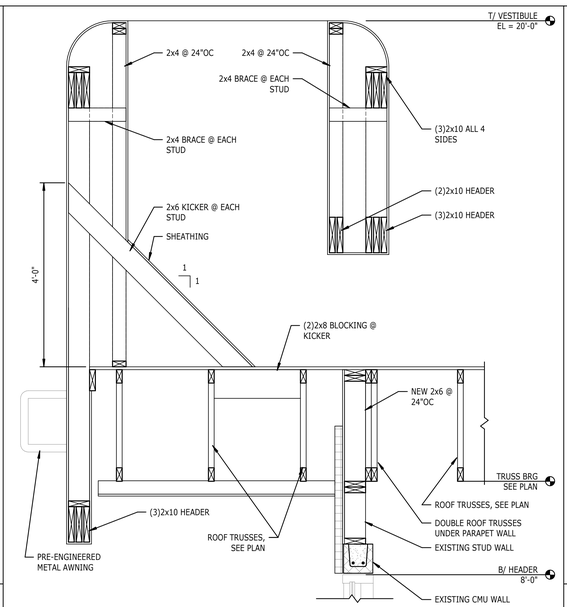

4 S-621 SECTION
3/4" = 1'-0"

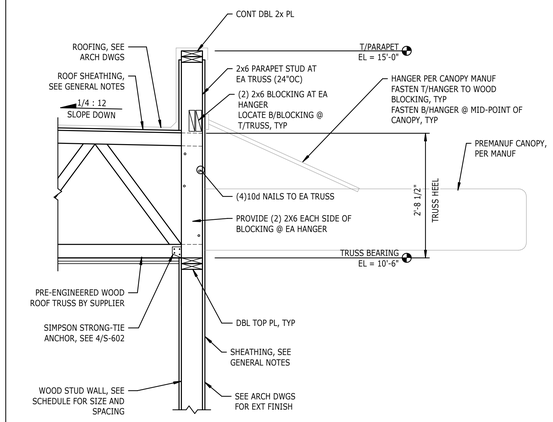

1 S-621 SECTION
FLAT ROOF TRUSSES PERPENDICULAR TO EXTERIOR WALL
3/4" = 1'-0"

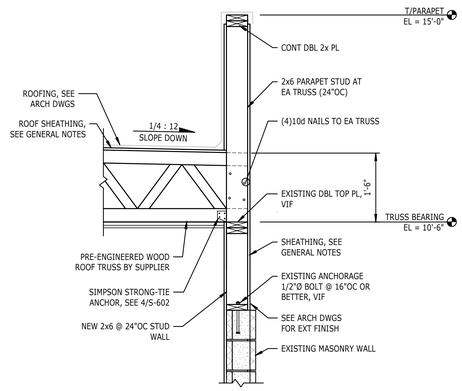

5 S-621 SECTION
FLAT ROOF TRUSSES PERPENDICULAR TO EXTERIOR WALL
3/4" = 1'-0"

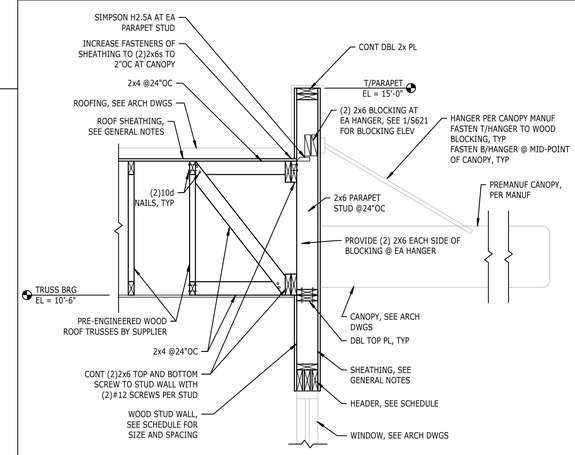

2 S-621 SECTION
FLAT ROOF TRUSSES PARALLEL TO EXTERIOR WALL
3/4" = 1'-0"

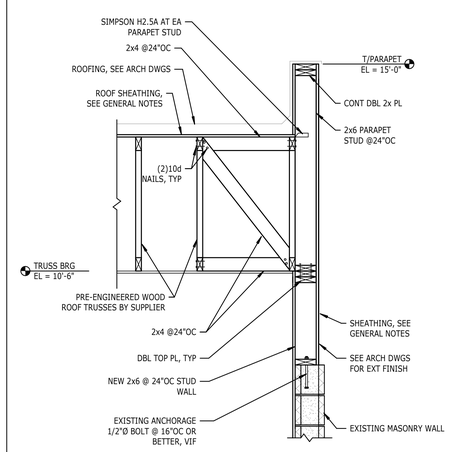

3 S-621 SECTION
3/4" = 1'-0"

NEWBERRY COUNTY AIRPORT

TERMINAL RENOVATION & EXPANSION

ARCHITECT

THE WILSON GROUP
P O BOX 5510
CHARLOTTE, NC 28299
(704) 331-9747

PROJECT MANAGER & CIVIL ENGINEER

TALBERT, BRIGHT & ELLINGTON
2000 PARK STREET, SUITE 101
COLUMBIA, NC 29201
(803) 933-9290

STRUCTURAL ENGINEER

STEWART
101 N. TRYON ST., SUITE 1400
CHARLOTTE, NC 28202
(704) 909-3523 FIRM NO.: C-1051

MECHANICAL, ELECTRICAL & PLUMBING ENGINEER

SABER ENGINEERING
2923 S. TRYON ST., SUITE 280
CHARLOTTE, NC 28203
(704) 373-0068

5/1/2018

REVISIONS

DATE MAY 1, 2018

PROJECT NUMBER 9198-000

SHEET TITLE
DETAILS & SECTIONS

SHEET NUMBER
S-621

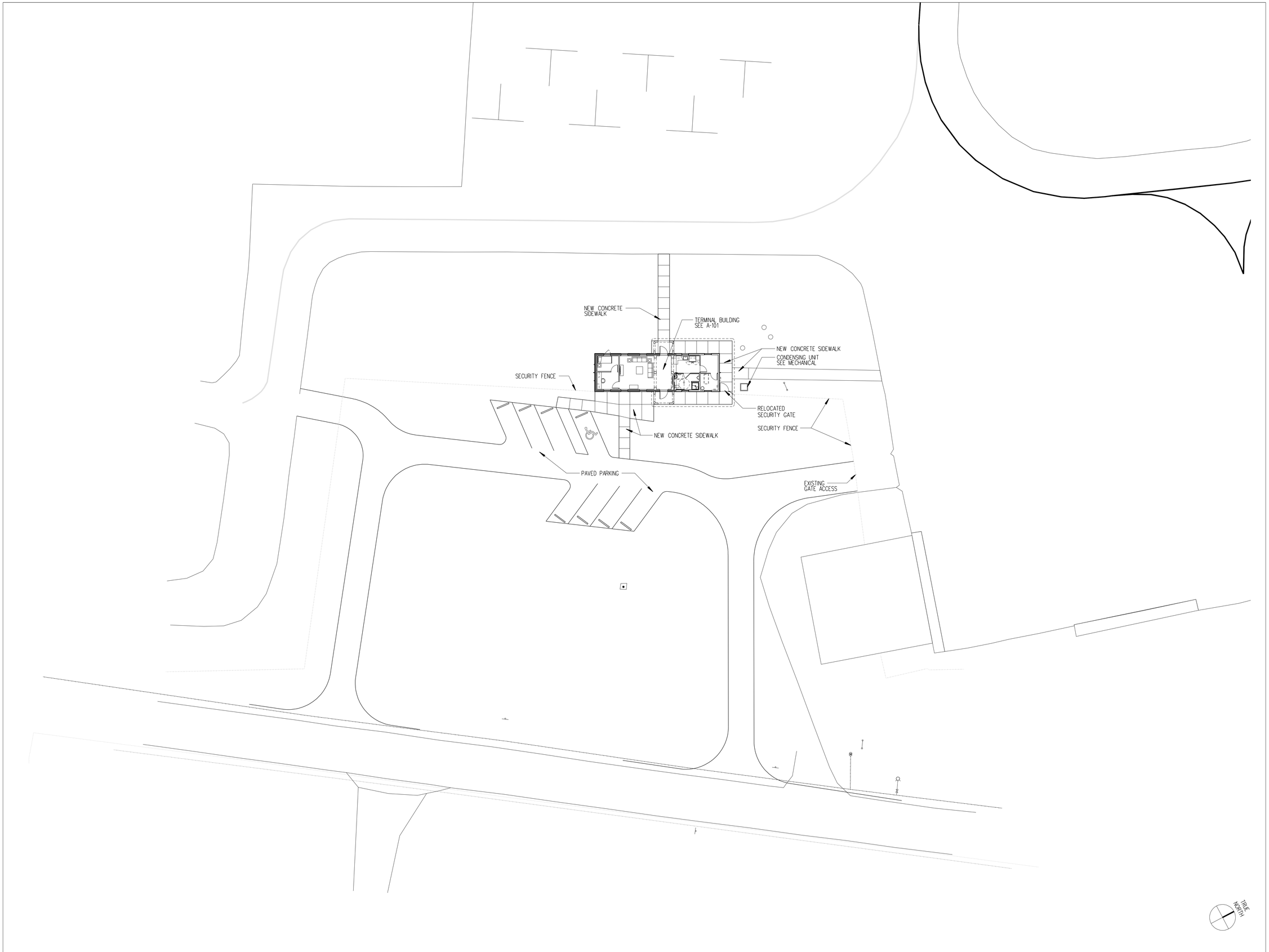

1 ARCHITECTURAL SITE PLAN

1/16" = 1'-0"

NEWBERRY COUNTY AIRPORT

TERMINAL RENOVATION & EXPANSION

STATE OF SOUTH CAROLINA
THE WILSON GROUP ARCHITECTS
Charlotte, NC
03022
REGISTERED ARCHITECTS

STATE OF SOUTH CAROLINA
BRIAN K. WILSON
Charlotte, NC
6451
REGISTERED ARCHITECT
5-1-18

ARCHITECT

THE WILSON GROUP
P O BOX 5510
CHARLOTTE, NC 28299
(704) 331-9747

PROJECT MANAGER I CIVIL ENGINEER

TALBERT, BRIGHT & ELLINGTON
2000 PARK STREET, SUITE 101
COLUMBIA, SC 29201
(803) 933-9290

STRUCTURAL ENGINEER

STEWART
101 N. TRYON ST., SUITE 1400
CHARLOTTE, NC 28202
(704) 909-3523

MECHANICAL, ELECTRICAL, & PLUMBING ENGINEER

SABER ENGINEERING
2923 S. TRYON ST., SUITE 280
CHARLOTTE, NC 28203
(704) 373-0068

REVISIONS

DATE MAY 1, 2018

PROJECT NUMBER 9198-000

SHEET TITLE

ARCHITECTURAL SITE PLAN

SHEET NUMBER

A-001

PLAN LEGEND

EXISTING CONSTRUCTION	
DEMOLISHED CONSTRUCTION	

DEMO NOTES

1. DEMO EXISTING EXTERIOR CMU WALL
2. DEMO EXISTING INTERIOR WALL
3. DEMO EXISTING WINDOW/DOOR
4. REMOVE EXISTING FIXTURES/BUILT-INS
5. REMOVE EXISTING SECURITY GATE/FENCING. SEE CIVIL DRAWINGS
6. REMOVE EXISTING SIDEWALK. SEE CIVIL DRAWINGS
7. REMOVE EXISTING METAL ROOF AND ROOF FRAMING
8. REMOVE EXISTING PORCH ROOF AND COLUMNS
9. REMOVE EXISTING HVAC/ELECTRICAL EQUIPMENT

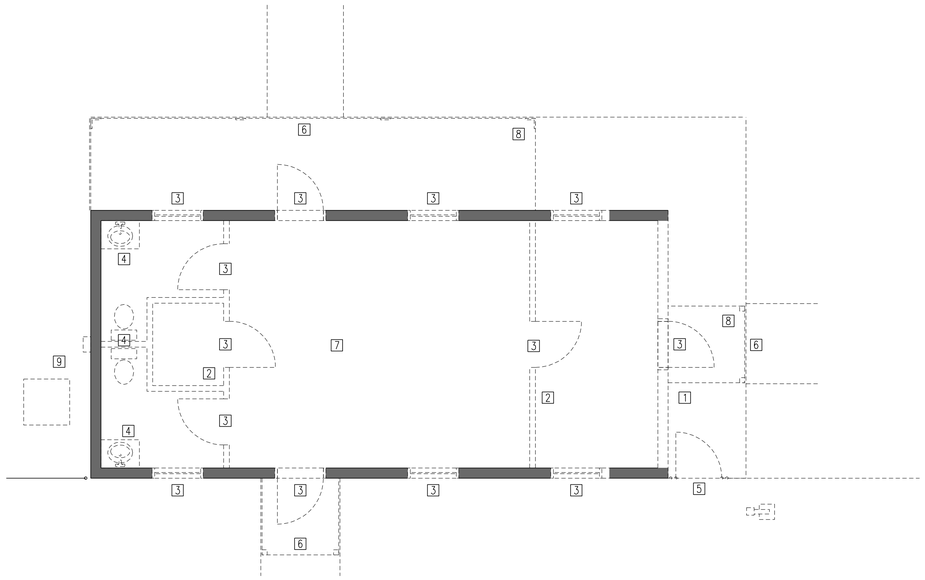

11 A-001 FIRST LEVEL DEMO PLAN 1/4" = 1'-0"

SF SUMMARY

	AREA HSF	AREA UHSF
EXISTING FIRST FLOOR HSF	657	
NEW FIRST FLOOR HSF	350	
TOTAL HSF	1,007	
NEW VESTIBULE UHSF		112

PLAN LEGEND

NEW CONSTRUCTION	
EXISTING CONSTRUCTION	

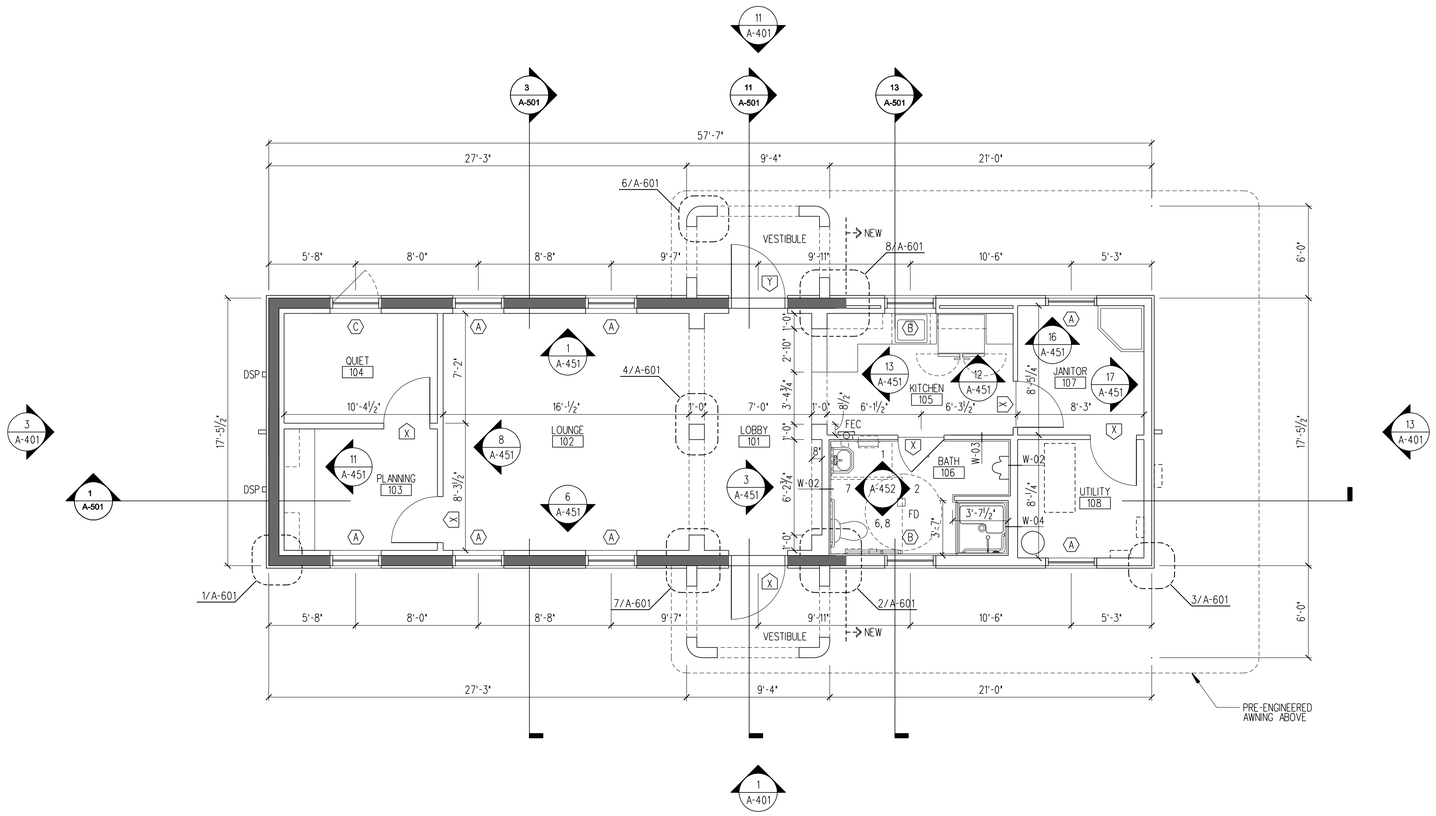

1 A-001 ARCHITECTURAL FIRST LEVEL FLOOR PLAN 1/4" = 1'-0"

NEWBERRY COUNTY AIRPORT

TERMINAL RENOVATION & EXPANSION

STATE OF SOUTH CAROLINA — THE WILSON GROUP ARCHITECTS, Charlotte, NC 03022 — REGISTERED ARCHITECTS

STATE OF SOUTH CAROLINA — BRIAN R. WILSON, Columbia, NC 6451 — REGISTERED ARCHITECT — 5-1-18

ARCHITECT

THE WILSON GROUP
P O BOX 5510
CHARLOTTE, NC 28299
(704) 331-9747

PROJECT MANAGER I CIVIL ENGINEER

TALBERT, BRIGHT & ELLINGTON
2000 PARK STREET, SUITE 101
COLUMBIA, SC 29201
(803) 933-9290

STRUCTURAL ENGINEER

STEWART
101 N. TRYON ST., SUITE 1400
CHARLOTTE, NC 28202
(704) 909-3523

MECHANICAL, ELECTRICAL, & PLUMBING ENGINEER

SABER ENGINEERING
2923 S. TRYON ST., SUITE 280
CHARLOTTE, NC 28203
(704) 373-0068

REVISIONS

DATE	MAY 1, 2018
PROJECT NUMBER	9198-000

SHEET TITLE

DEMOLITION & ARCHITECTURAL FLOOR PLAN

SHEET NUMBER

A-101

SF SUMMARY	
TOTAL ROOF AREA	930 SF

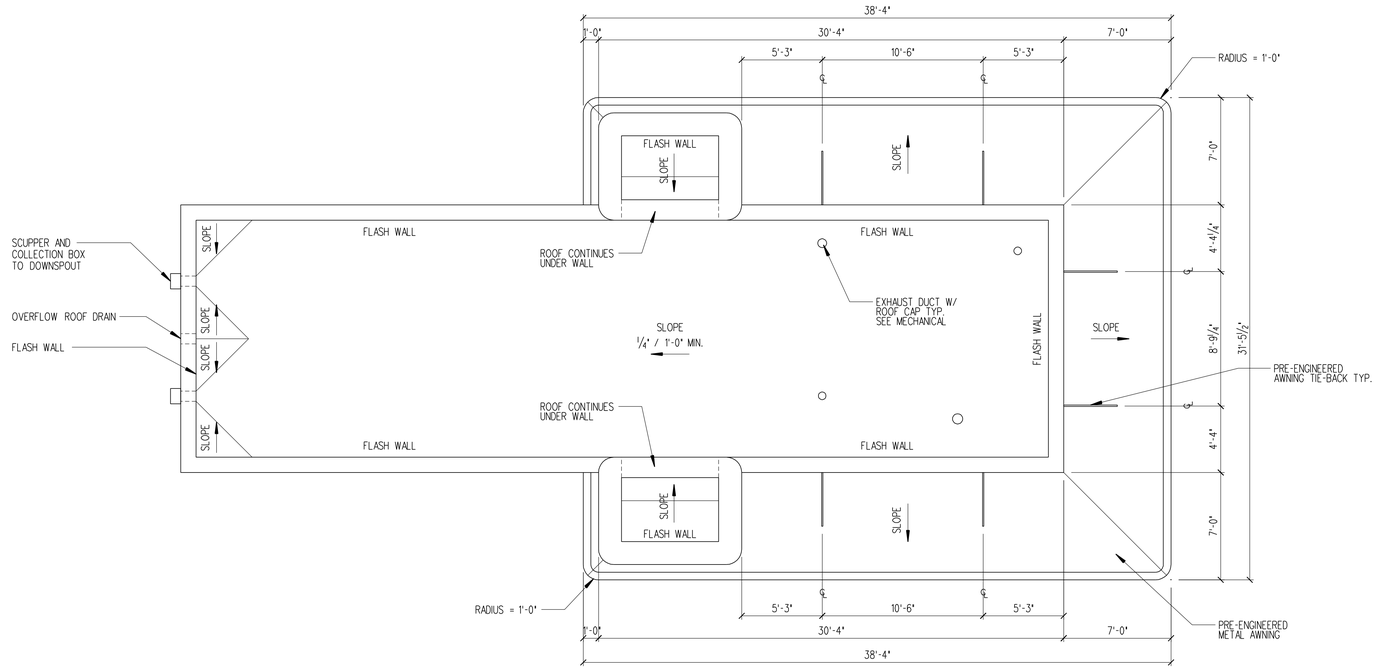

11 A-101 ROOF PLAN 1/4" = 1'-0"

NOTES:
1. CEILING HEIGHT TO BE 9'-0" A.F.F. U.N.O.

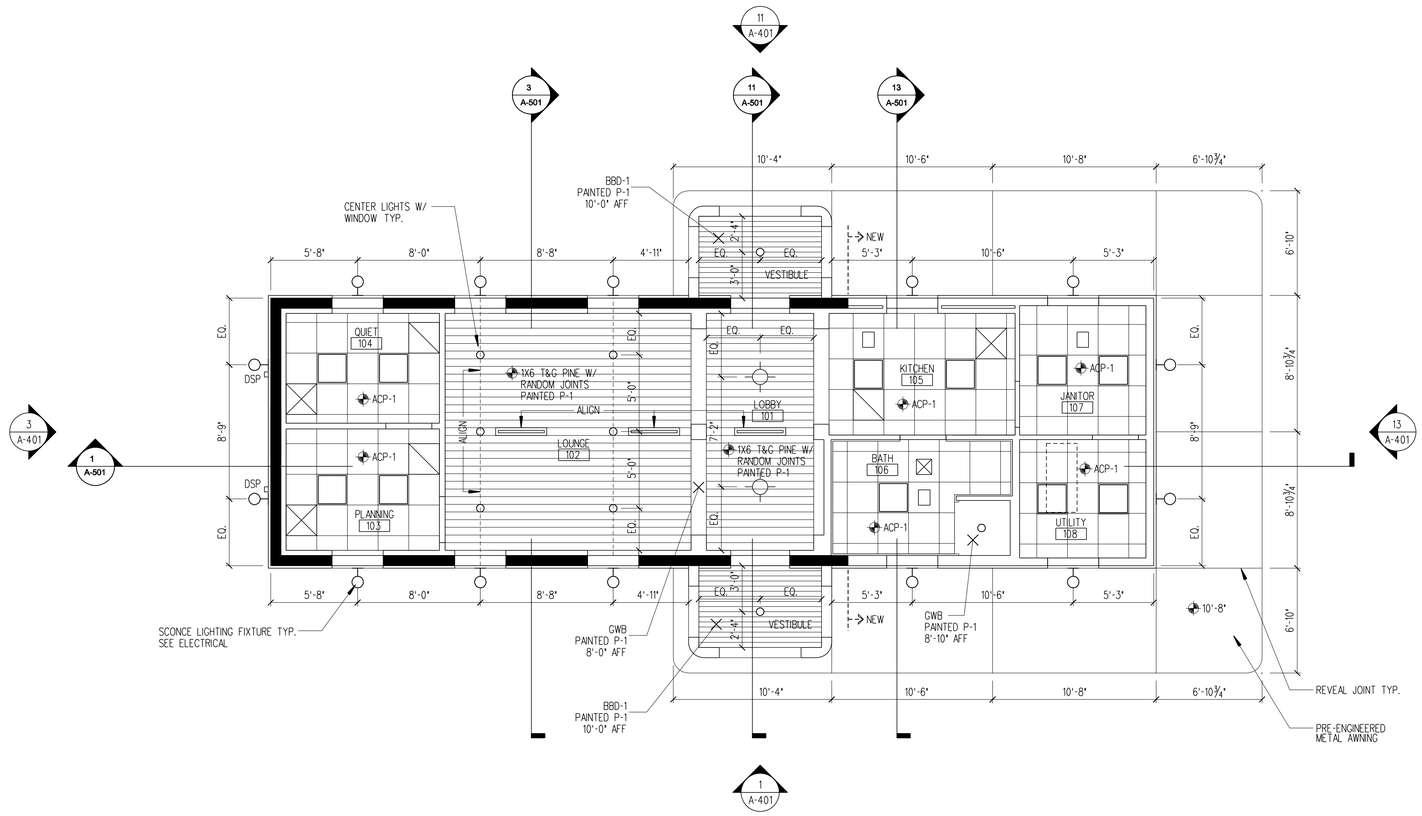

1 A-101 FIRST LEVEL REFLECTED CEILING PLAN 1/4" = 1'-0"

NEWBERRY COUNTY AIRPORT

TERMINAL RENOVATION & EXPANSION

STATE OF SOUTH CAROLINA — THE WILSON GROUP ARCHITECTS, Charlotte, NC 03022 — REGISTERED ARCHITECTS

STATE OF SOUTH CAROLINA — BRIAN R. WILSON, Charlotte, NC 6451 — REGISTERED ARCHITECT — 5.1.18

ARCHITECT

THE WILSON GROUP
P O BOX 5510
CHARLOTTE, NC 28299
(704) 331-9747

PROJECT MANAGER I CIVIL ENGINEER

TALBERT, BRIGHT & ELLINGTON
2000 PARK STREET, SUITE 101
COLUMBIA, SC 29201
(803) 933-9290

STRUCTURAL ENGINEER

STEWART
101 N. TRYON ST., SUITE 1400
CHARLOTTE, NC 28202
(704) 909-3523

MECHANICAL, ELECTRICAL, & PLUMBING ENGINEER

SABER ENGINEERING
2923 S. TRYON ST., SUITE 280
CHARLOTTE, NC 28203
(704) 373-0068

REVISIONS

DATE	MAY 1, 2018
PROJECT NUMBER	9198-000

SHEET TITLE

ROOF PLAN & REFLECTED CEILING PLAN

SHEET NUMBER

A-201

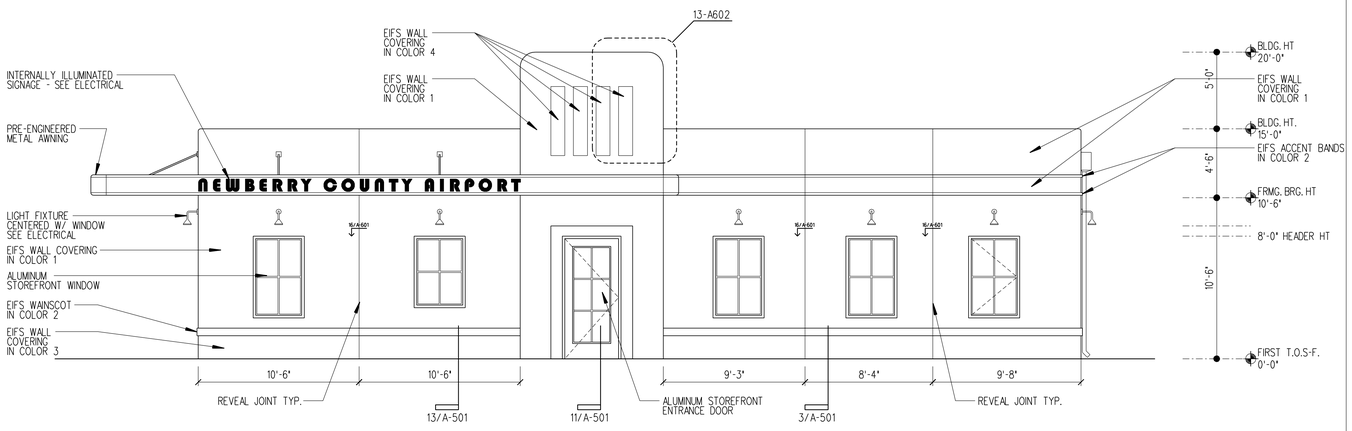

11 A-101 REAR (WEST) ELEVATION 1/4" = 1'-0"

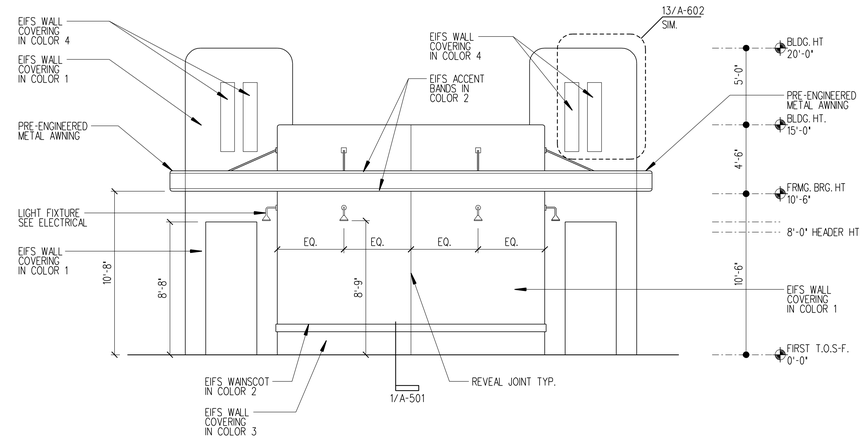

13 A-101 SIDE (NORTH) ELEVATION 1/4" = 1'-0"

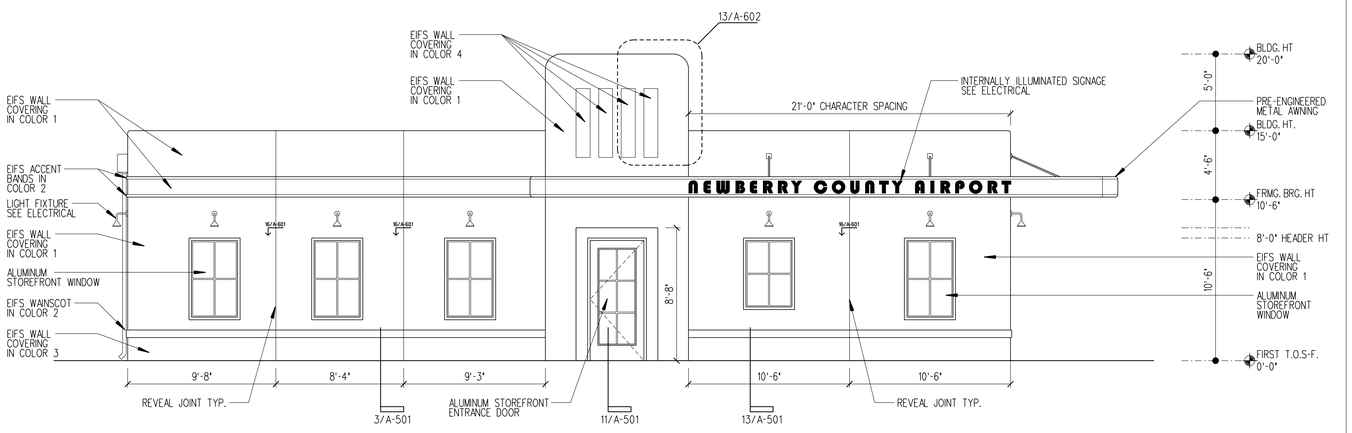

1 A-101 FRONT (EAST) ELEVATION 1/4" = 1'-0"

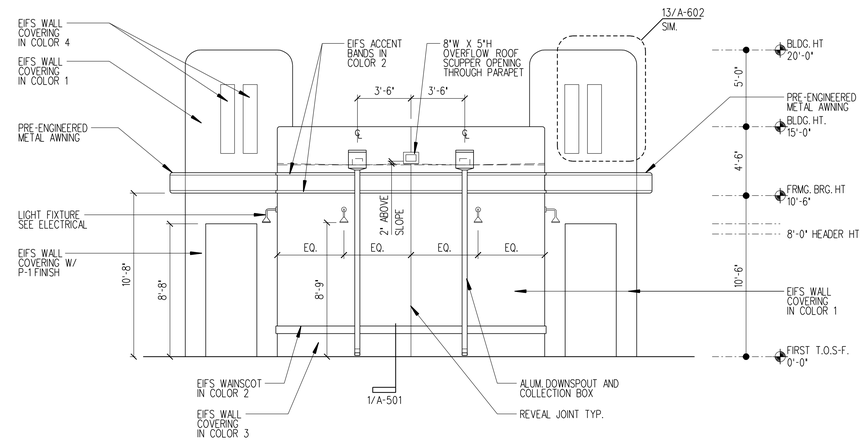

3 A-101 SIDE (SOUTH) ELEVATION 1/4" = 1'-0"

NEWBERRY COUNTY AIRPORT

TERMINAL RENOVATION & EXPANSION

STATE OF SOUTH CAROLINA
THE WILSON GROUP ARCHITECTS
Charlotte, NC
03022
REGISTERED ARCHITECTS

STATE OF SOUTH CAROLINA
BRIAN K. WILSON
Charlotte, NC
6451
REGISTERED ARCHITECT
5-1-18

ARCHITECT

THE WILSON GROUP
P O BOX 5510
CHARLOTTE, NC 28299
(704) 331-9747

PROJECT MANAGER I CIVIL ENGINEER
TALBERT, BRIGHT & ELLINGTON
2000 PARK STREET, SUITE 101
COLUMBIA, SC 29201
(803) 933-9290

STRUCTURAL ENGINEER
STEWART
101 N. TRYON ST., SUITE 1400
CHARLOTTE, NC 28202
(704) 909-3523

MECHANICAL, ELECTRICAL, & PLUMBING ENGINEER
SABER ENGINEERING
2923 S. TRYON ST., SUITE 280
CHARLOTTE, NC 28203
(704) 373-0068

REVISIONS

DATE	MAY 1, 2018
PROJECT NUMBER	9198-000

SHEET TITLE

ARCHITECTURAL ELEVATIONS

SHEET NUMBER

A-401

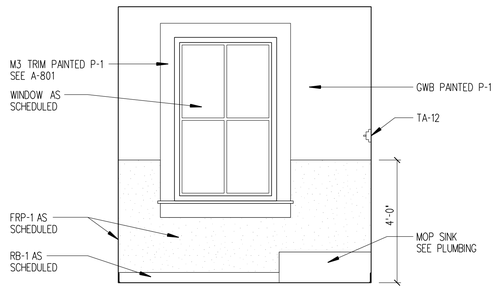

16 A-101 INTERIOR ELEVATION 1/2" = 1'-0"

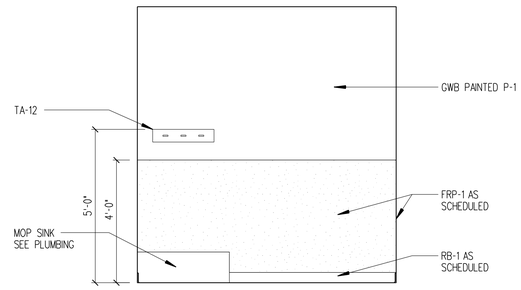

17 A-101 INTERIOR ELEVATION 1/2" = 1'-0"

FINISH PATTERN LEGEND

CWT-1	
CWT-2	
CWT-3	

SEE A-901 FOR FINISH SCHEDULE

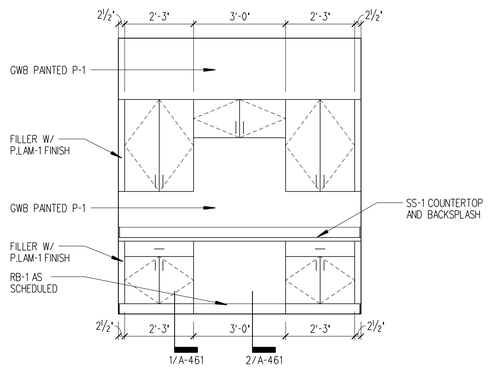

11 A-101 INTERIOR ELEVATION 1/2" = 1'-0"

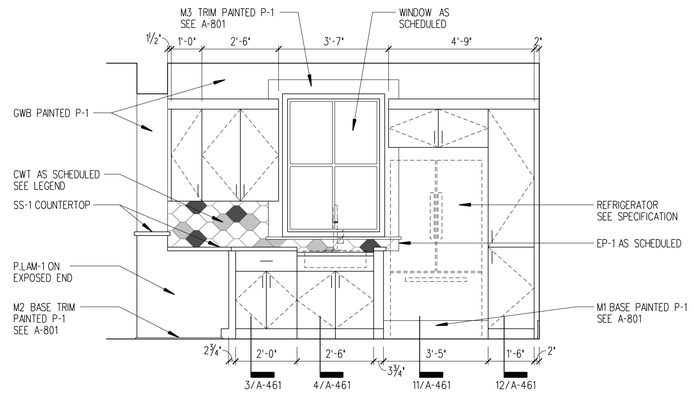

12 A-101 INTERIOR ELEVATION 1/2" = 1'-0"

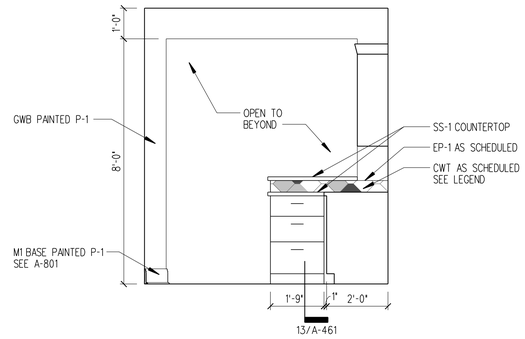

13 A-101 INTERIOR ELEVATION 1/2" = 1'-0"

6 A-101 INTERIOR ELEVATION 1/2" = 1'-0"

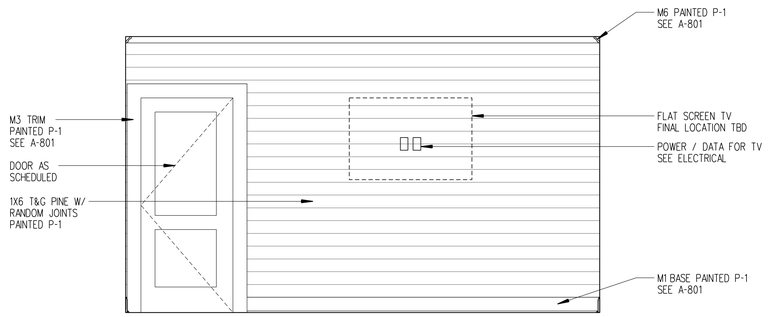

8 A-101 INTERIOR ELEVATION 1/2" = 1'-0"

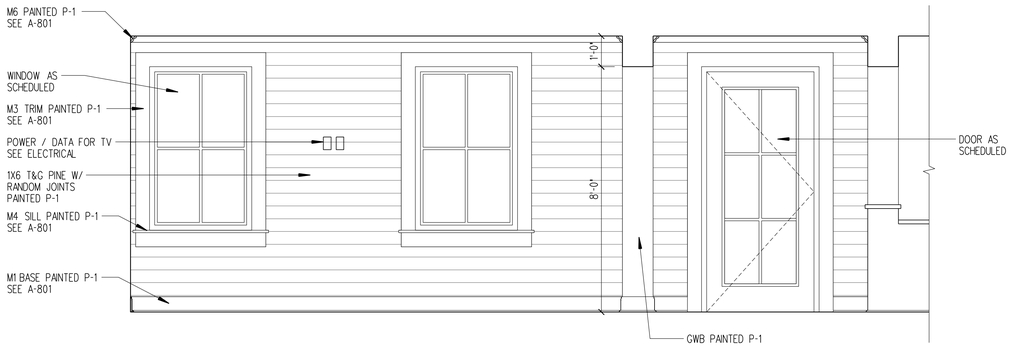

1 A-101 INTERIOR ELEVATION 1/2" = 1'-0"

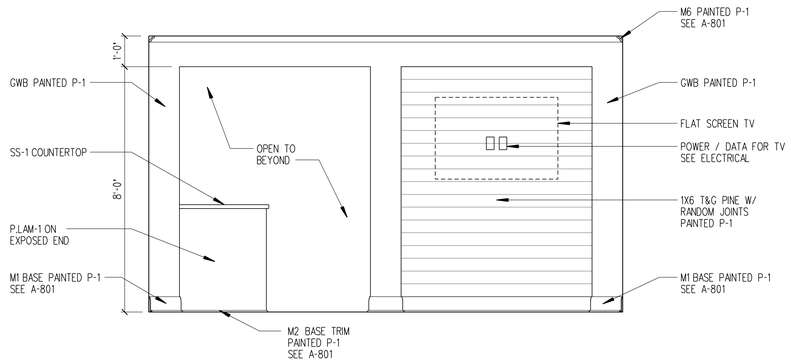

3 A-101 INTERIOR ELEVATION 1/2" = 1'-0"

NEWBERRY COUNTY AIRPORT

TERMINAL RENOVATION & EXPANSION

STATE OF SOUTH CAROLINA
THE WILSON GROUP ARCHITECTS
Charlotte, NC
03022
REGISTERED ARCHITECTS

STATE OF SOUTH CAROLINA
BRIAN R. WILSON
Charlotte, NC
6451
REGISTERED ARCHITECT
5-1-18

ARCHITECT

THE WILSON GROUP
P O BOX 5510
CHARLOTTE, NC 28299
(704) 331-9747

PROJECT MANAGER I CIVIL ENGINEER
TALBERT, BRIGHT & ELLINGTON
2000 PARK STREET, SUITE 101
COLUMBIA, SC 29201
(803) 933-9290

STRUCTURAL ENGINEER
STEWART
101 N. TRYON ST., SUITE 1400
CHARLOTTE, NC 28202
(704) 909-3523

MECHANICAL, ELECTRICAL, & PLUMBING ENGINEER
SABER ENGINEERING
2923 S. TRYON ST., SUITE 280
CHARLOTTE, NC 28203
(704) 373-0068

REVISIONS

DATE	MAY 1, 2018
PROJECT NUMBER	9198-000

SHEET TITLE

ARCHITECTURAL ENLARGED ELEVATIONS

SHEET NUMBER

A-451

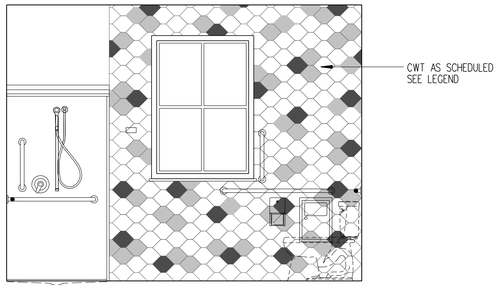

16 A-452 INTERIOR FINISH ELEVATION 1/2" = 1'-0"

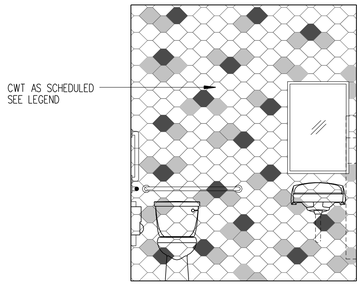

17 A-452 INTERIOR FINISH ELEVATION 1/2" = 1'-0"

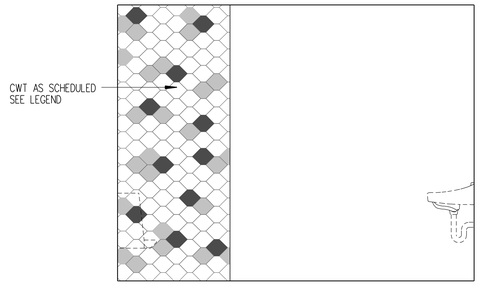

18 A-452 INTERIOR FINISH ELEVATION 1/2" = 1'-0"

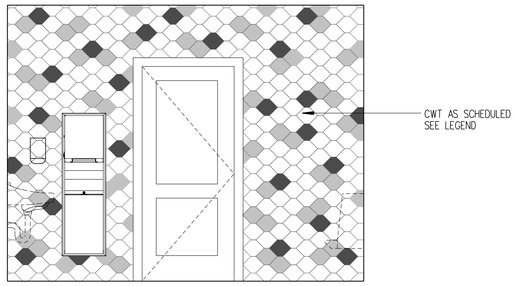

11 A-452 INTERIOR FINISH ELEVATION 1/2" = 1'-0"

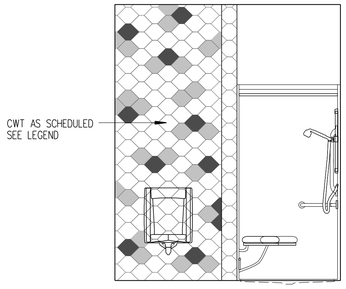

12 A-452 INTERIOR FINISH ELEVATION 1/2" = 1'-0"

FINISH PATTERN LEGEND

CWT-1	
CWT-2	
CWT-3	
SEE A-901 FOR FINISH SCHEDULE	

NOTES:
1. ESTIMATED PERCENTAGES FOR WALL TILE:
   CWT-1 = +/- 75%; CWT-2 = +/- 18%; CWT-3 = +/- 7%
2. SEE ELEVATIONS FOR DESIGN INTENT; GC TO MATCH TILE PATTERNS SHOWN.

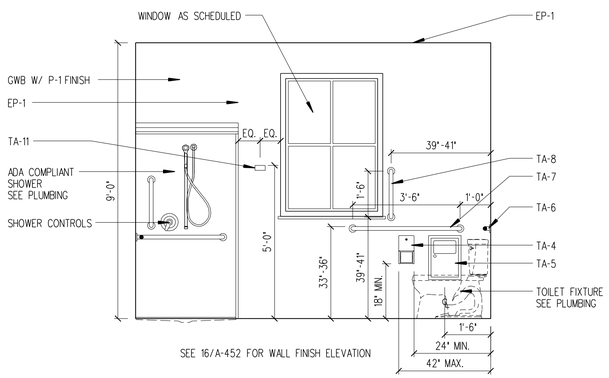

6 A-101 INTERIOR ELEVATION 1/2" = 1'-0"

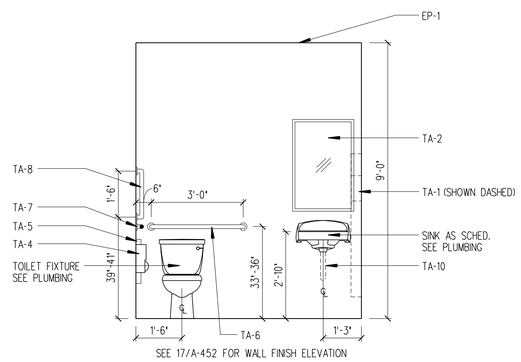

7 A-101 INTERIOR ELEVATION 1/2" = 1'-0"

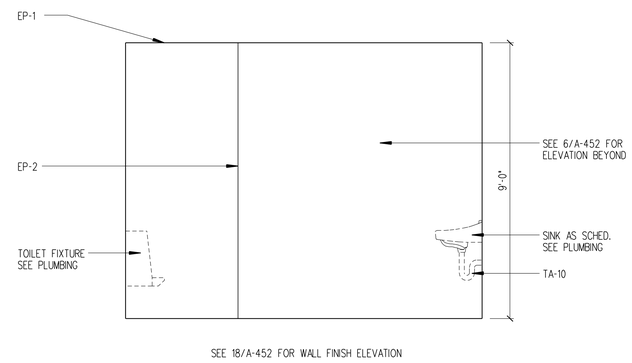

8 A-101 INTERIOR ELEVATION 1/2" = 1'-0"

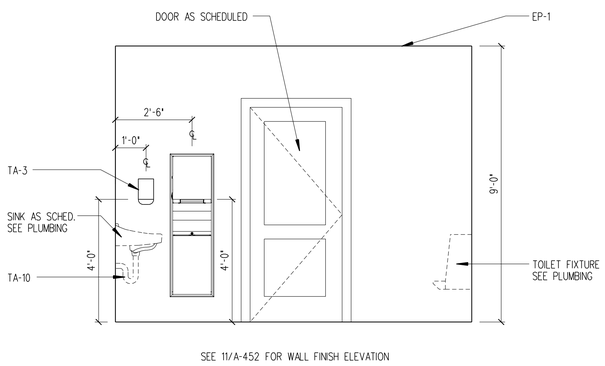

1 A-101 INTERIOR ELEVATION 1/2" = 1'-0"

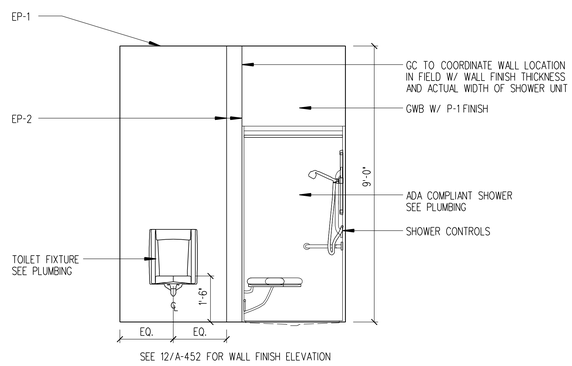

2 A-101 INTERIOR ELEVATION 1/2" = 1'-0"

TOILET ACCESSORY LEGEND

ITEM	DESCRIPTION	PART NO./NOTES
TA-1	RECESSED CONVERTIBLE PAPER TOWEL DISPENSER AND WASTE RECEPTACLE W/ TOUCH-FREE ROLL TOWEL DISPENSER	BOBRICK B-3961
TA-2	24"X36" TEMPERED GLASS WELDED-FRAME MIRROR (MOUNT OVER TILE, CENTERED OVER SINK @ 42" A.F.F. TO BOTTOM OF MIRROR FRAME)	BOBRICK B-2908 2436
TA-3	WALL-MOUNTED TOUCH-FREE SOAP DISPENSER	GOJO LTX-12 (CHROME)
TA-4	WALL OR PARTITION-MOUNTED TOILET TISSUE DISPENSER	BOBRICK B-6999
TA-5	WALL OR PARTITION-MOUNTED SANITARY NAPKIN DISPOSAL	BOBRICK B-270
TA-6	S.S. GRAB BAR W/ CONCEALED MOUNTING (36") REAR	BOBRICK B-5806 x 36
TA-7	S.S. GRAB BAR W/ CONCEALED MOUNTING (42") SIDE	BOBRICK B-5806 x 42
TA-8	S.S. GRAB BAR W/ CONCEALED MOUNTING (18") SIDE	BOBRICK B-5806 x 18
TA-9	COAT HOOK WITH BUMPER MOUNTED AT 60" A.F.F.	BOBRICK B-212
TA-10	INSULATED TAILPIECE AND HOT WATER PIPE (CLASS C RATING)	REQ'D ALL LAVATORIES
TA-11	WALL-MOUNTED CLOTHES HOOK STRIP	BOBRICK B-672
TA-12	S.S. MOP AND BROOM HOLDER	BOBRICK B-223

NOTES:
1. ALL GWB IS 5/8" TYPE X.
2. PROVIDE SOLID WOOD BLOCKING IN WALL AS REQUIRED FOR MOUNTING OF GRAB BARS AND OTHER TOILET ACCESSORY ITEMS.
3. SEE A-901 FOR FINISH FLOOR PLAN.

NEWBERRY COUNTY AIRPORT

TERMINAL RENOVATION & EXPANSION

STATE OF SOUTH CAROLINA
THE WILSON GROUP ARCHITECTS
Charlotte, NC
03022
REGISTERED ARCHITECTS

STATE OF SOUTH CAROLINA
BRIAN K. WILSON
Columbia, NC
6451
REGISTERED ARCHITECT
5-1-18

ARCHITECT

THE WILSON GROUP
P O BOX 5510
CHARLOTTE, NC 28299
(704) 331-9747

PROJECT MANAGER | CIVIL ENGINEER
TALBERT, BRIGHT & ELLINGTON
2000 PARK STREET, SUITE 101
COLUMBIA, SC 29201
(803) 933-9290

STRUCTURAL ENGINEER
STEWART
101 N. TRYON ST., SUITE 1400
CHARLOTTE, NC 28202
(704) 909-3523

MECHANICAL, ELECTRICAL, & PLUMBING ENGINEER
SABER ENGINEERING
2923 S. TRYON ST., SUITE 280
CHARLOTTE, NC 28203
(704) 373-0068

REVISIONS

DATE MAY 1, 2018
PROJECT NUMBER 9198-000
SHEET TITLE

ARCHITECTURAL ENLARGED ELEVATIONS

SHEET NUMBER

A-452

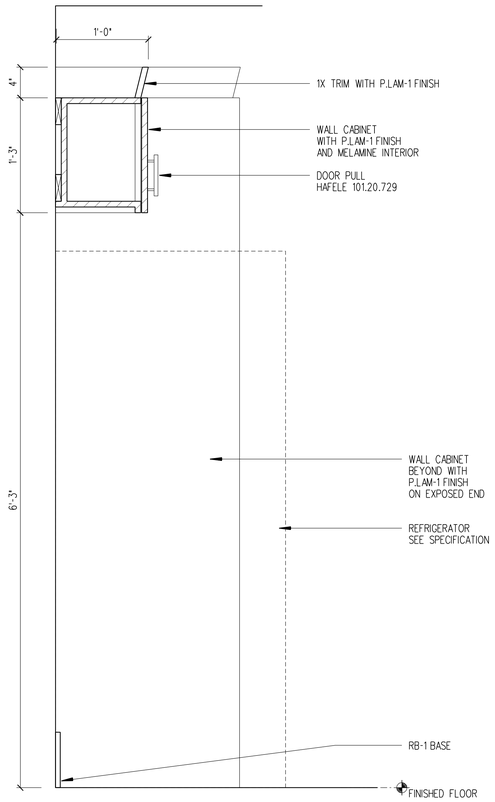

11 A-451 CASEWORK SECTION 1 1/2" = 1'-0"

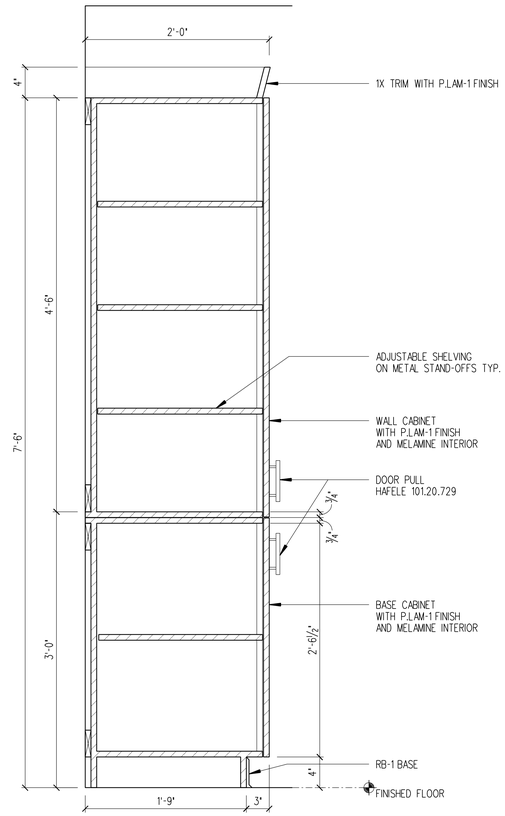

12 A-451 CASEWORK SECTION 1 1/2" = 1'-0"

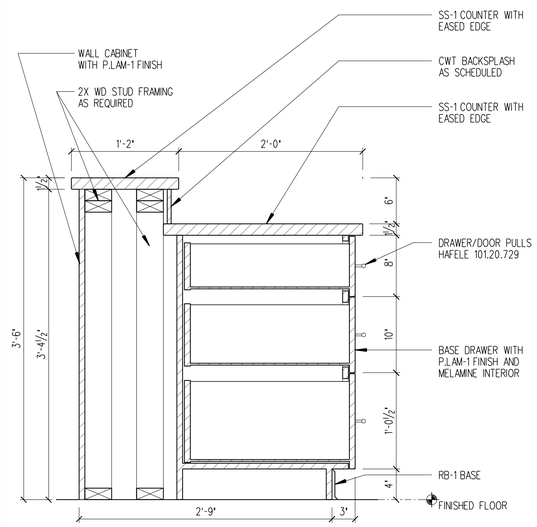

13 A-451 CASEWORK SECTION 1 1/2" = 1'-0"

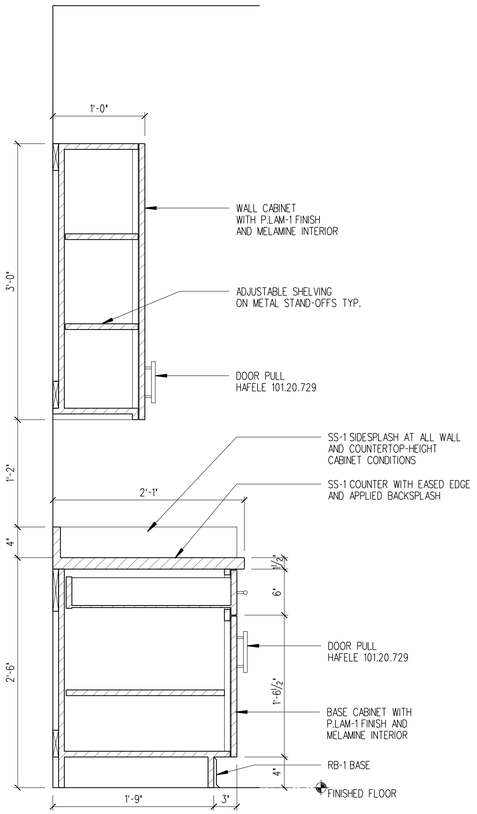

1 A-451 CASEWORK SECTION 1 1/2" = 1'-0"

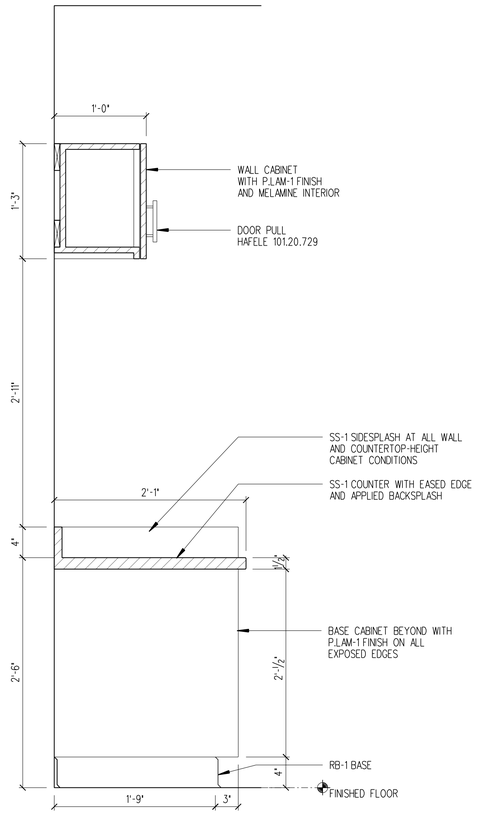

2 A-451 CASEWORK SECTION 1 1/2" = 1'-0"

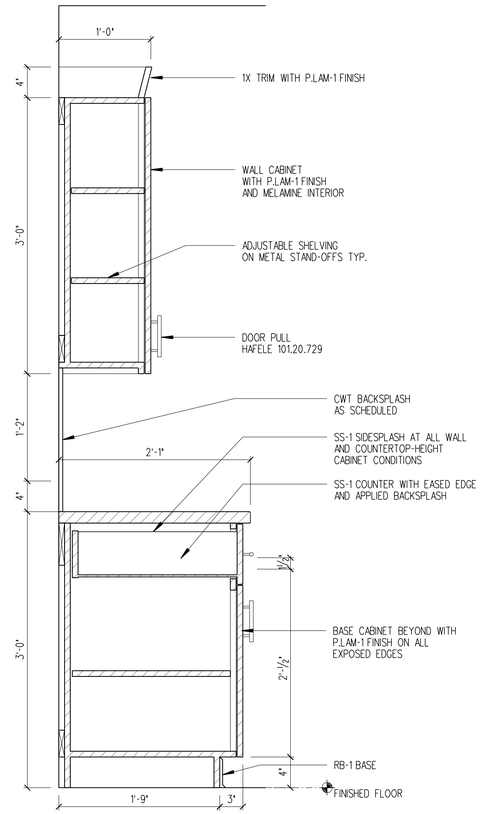

3 A-451 CASEWORK SECTION 1 1/2" = 1'-0"

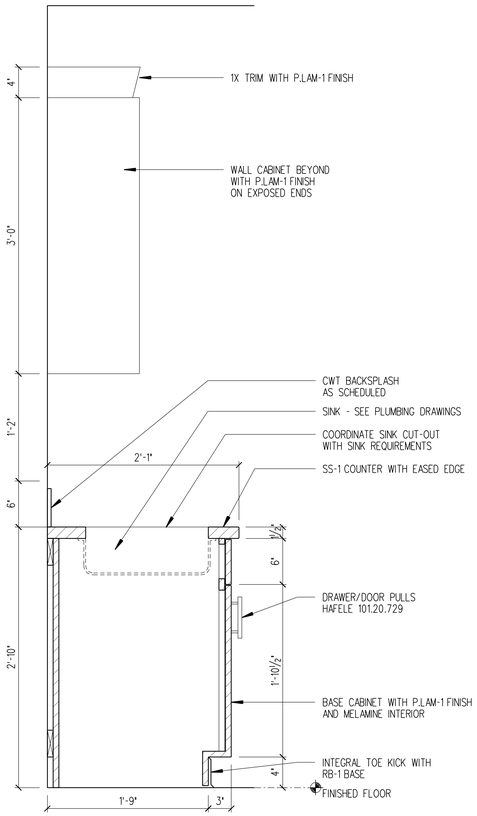

4 A-451 CASEWORK SECTION 1 1/2" = 1'-0"

NEWBERRY COUNTY AIRPORT

TERMINAL RENOVATION & EXPANSION

STATE OF SOUTH CAROLINA
THE WILSON GROUP ARCHITECTS
Charlotte, NC
03022
REGISTERED ARCHITECTS

STATE OF SOUTH CAROLINA
BRIAN K. WILSON
Charlotte, NC
6451
REGISTERED ARCHITECT
5-1-18

ARCHITECT

THE WILSON GROUP

P O BOX 5510
CHARLOTTE, NC 28299
(704) 331-9747

PROJECT MANAGER I CIVIL ENGINEER

TALBERT, BRIGHT & ELLINGTON

2000 PARK STREET, SUITE 101
COLUMBIA, SC 29201
(803) 933-9290

STRUCTURAL ENGINEER

STEWART

101 N. TRYON ST., SUITE 1400
CHARLOTTE, NC 28202
(704) 909-3523

MECHANICAL, ELECTRICAL, & PLUMBING ENGINEER

SABER ENGINEERING

2923 S. TRYON ST., SUITE 280
CHARLOTTE, NC 28203
(704) 373-0068

REVISIONS

DATE	MAY 1, 2018
PROJECT NUMBER	9198-000

SHEET TITLE

ARCHITECTURAL CASEWORK SECTIONS

SHEET NUMBER

A-461

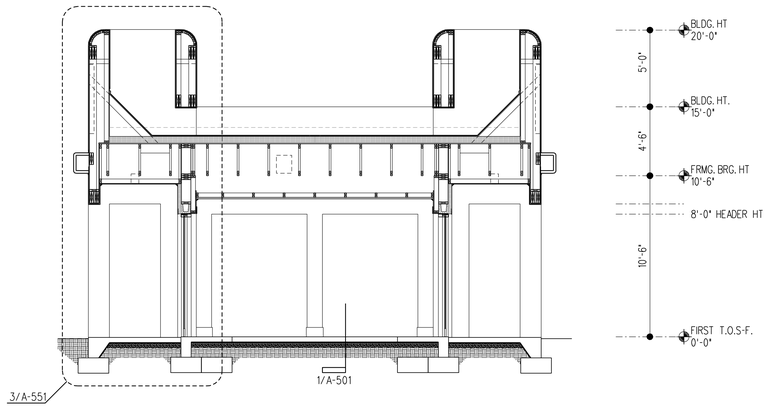

11 A-101 CROSS SECTION 1/4" = 1'-0"

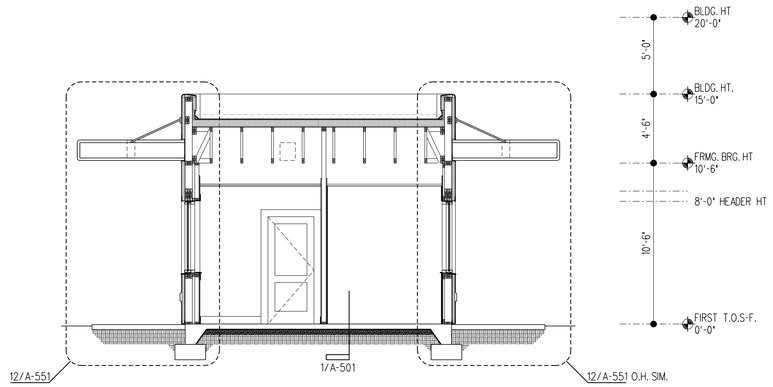

13 A-101 CROSS SECTION 1/4" = 1'-0"

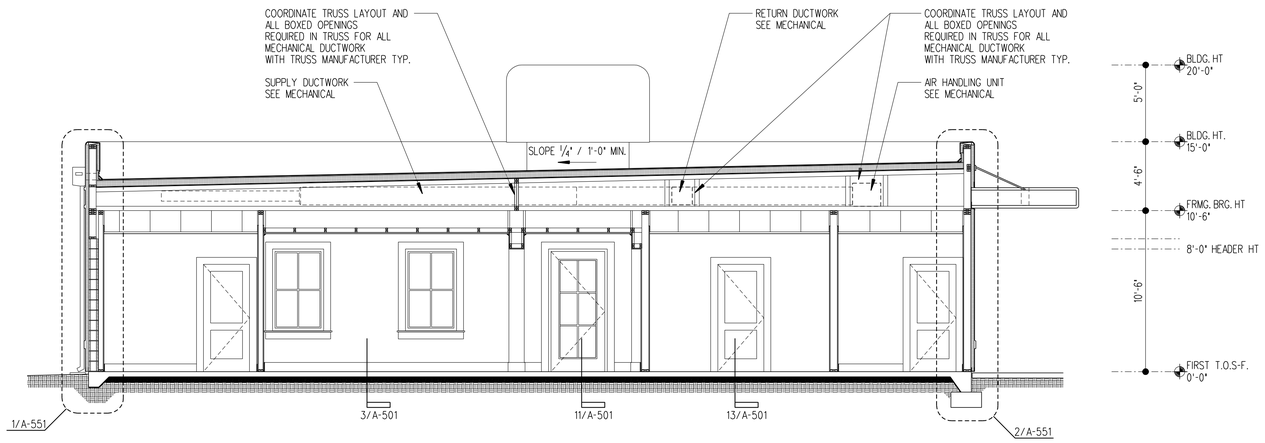

1 A-101 LONGITUDINAL SECTION 1/4" = 1'-0"

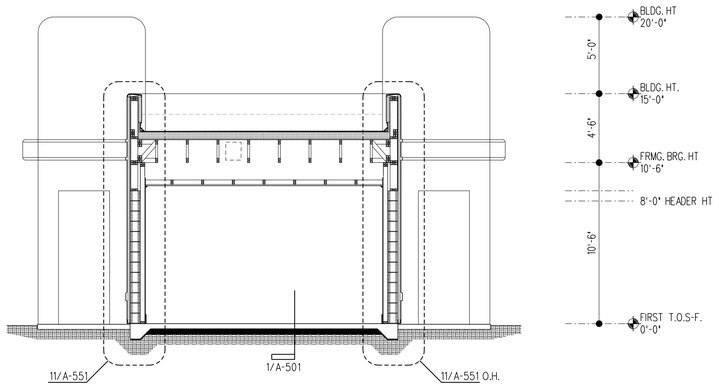

3 A-101 CROSS SECTION 1/4" = 1'-0"

NEWBERRY COUNTY AIRPORT

TERMINAL RENOVATION & EXPANSION

STATE OF SOUTH CAROLINA
THE WILSON GROUP ARCHITECTS
Charlotte, NC
03022
REGISTERED ARCHITECTS

STATE OF SOUTH CAROLINA
BRIAN K. WILSON
Charlotte, NC
6451
REGISTERED ARCHITECT
5-1-18

ARCHITECT

THE WILSON GROUP

P O BOX 5510
CHARLOTTE, NC 28299
(704) 331-9747

PROJECT MANAGER I CIVIL ENGINEER

TALBERT, BRIGHT & ELLINGTON

2000 PARK STREET, SUITE 101
COLUMBIA, SC 29201
(803) 933-9290

STRUCTURAL ENGINEER

STEWART

101 N. TRYON ST., SUITE 1400
CHARLOTTE, NC 28202
(704) 909-3523

MECHANICAL, ELECTRICAL, & PLUMBING ENGINEER

SABER ENGINEERING

2923 S. TRYON ST., SUITE 280
CHARLOTTE, NC 28203
(704) 373-0068

REVISIONS

DATE	MAY 1, 2018
PROJECT NUMBER	9198-000

SHEET TITLE

ARCHITECTURAL BUILDING SECTIONS

SHEET NUMBER

A-501

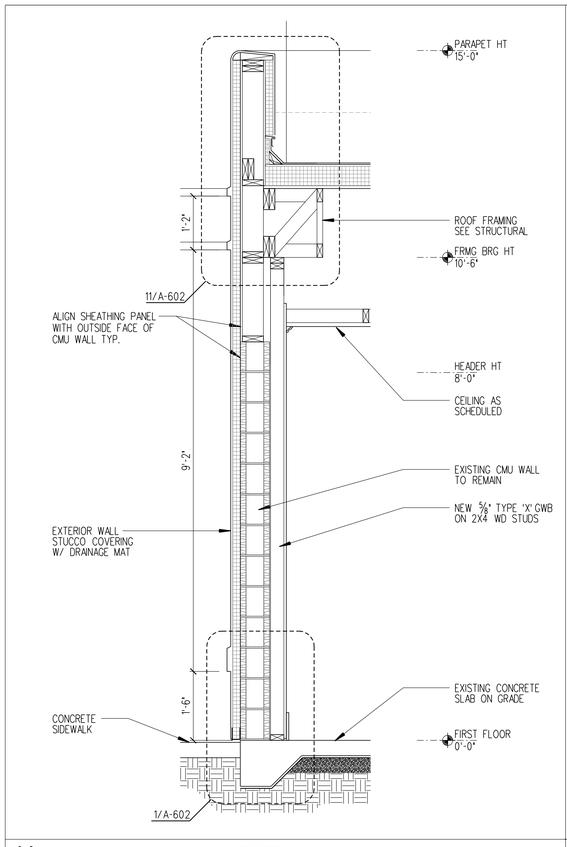

11 A-501 WALL SECTION 3/4" = 1'-0"

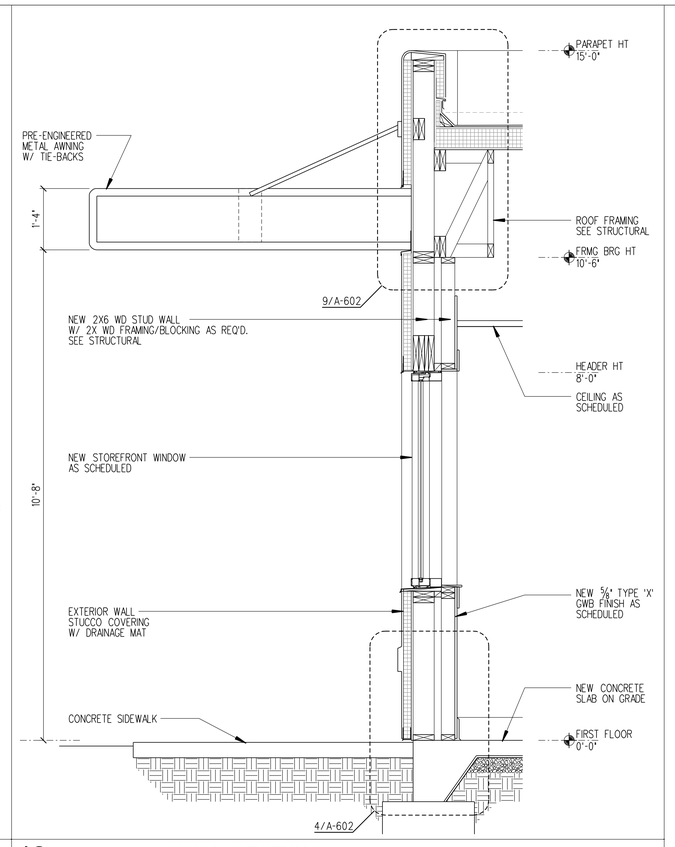

12 A-501 WALL SECTION 3/4" = 1'-0"

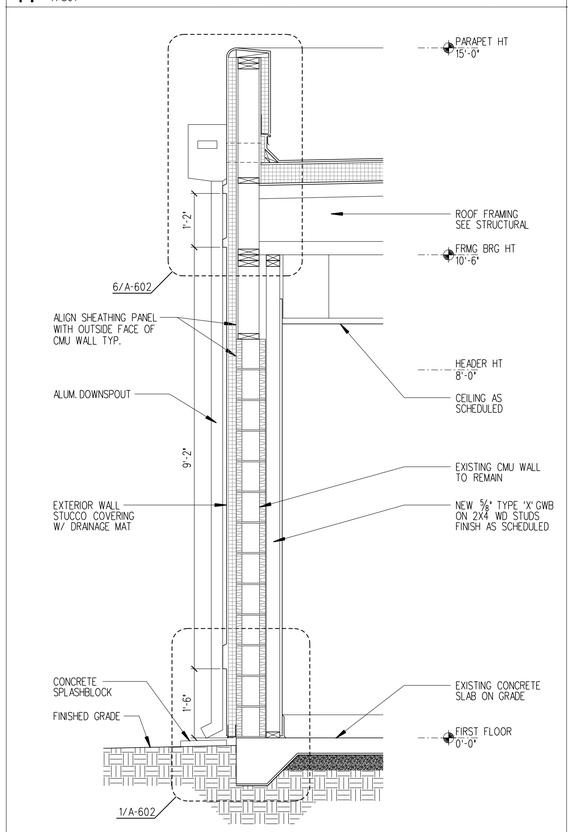

1 A-501 WALL SECTION 3/4" = 1'-0"

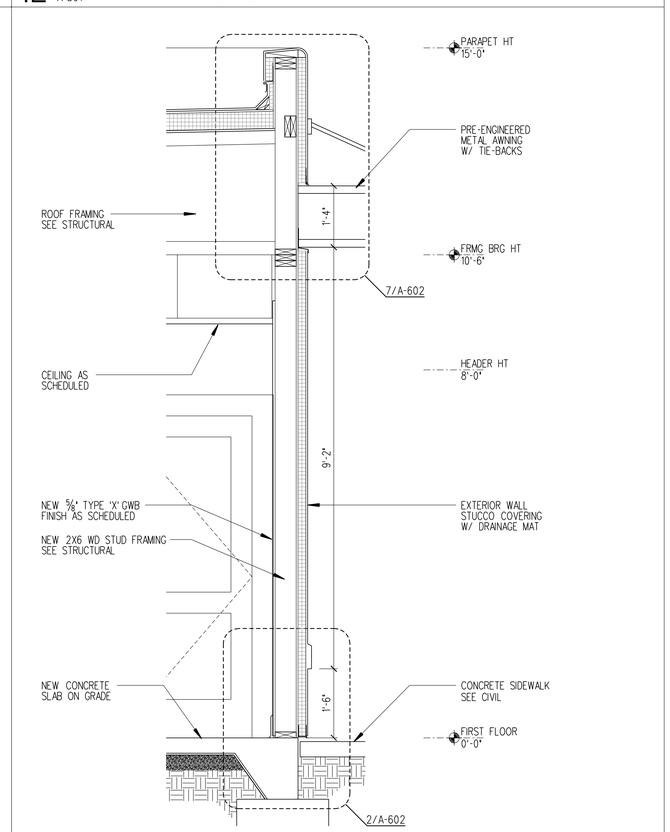

2 A-501 WALL SECTION 3/4" = 1'-0"

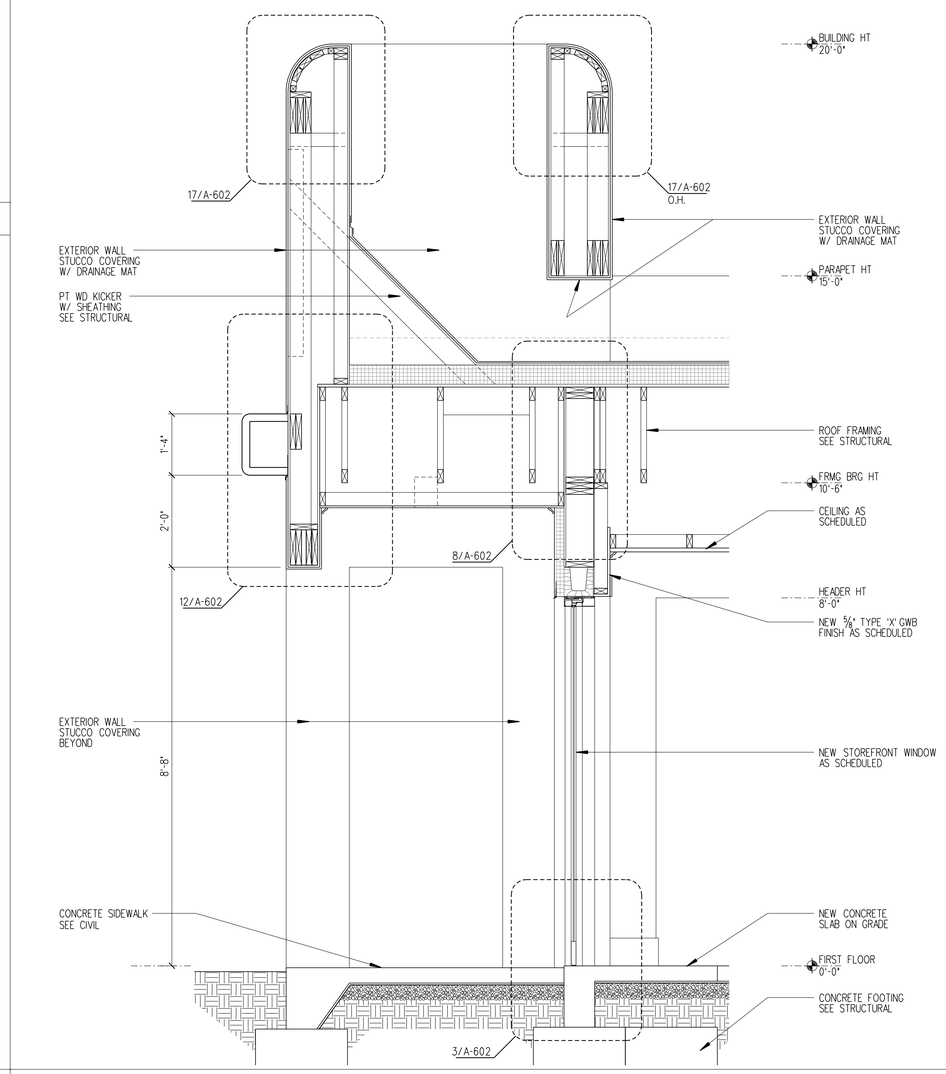

3 A-501 WALL SECTION 3/4" = 1'-0"

NEWBERRY COUNTY AIRPORT

TERMINAL RENOVATION & EXPANSION

ARCHITECT

THE WILSON GROUP

P O BOX 5510
CHARLOTTE, NC 28299
(704) 331-9747

PROJECT MANAGER I CIVIL ENGINEER

TALBERT, BRIGHT & ELLINGTON

2000 PARK STREET, SUITE 101
COLUMBIA, SC 29201
(803) 933-9290

STRUCTURAL ENGINEER

STEWART

101 N. TRYON ST., SUITE 1400
CHARLOTTE, NC 28202
(704) 909-3523

MECHANICAL, ELECTRICAL, & PLUMBING ENGINEER

SABER ENGINEERING

2923 S. TRYON ST., SUITE 280
CHARLOTTE, NC 28203
(704) 373-0068

REVISIONS

DATE	MAY 1, 2018
PROJECT NUMBER	9198-000

SHEET TITLE

ARCHITECTURAL WALL SECTIONS

SHEET NUMBER

A-551

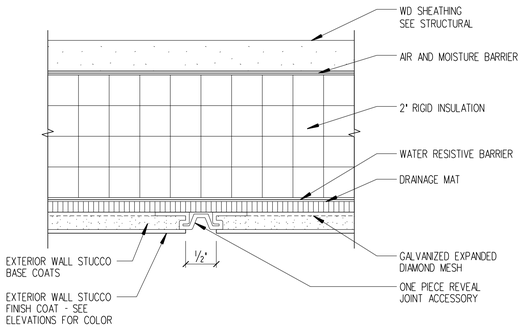

16 A-401 REVEAL JOINT DETAIL FULL SIZE

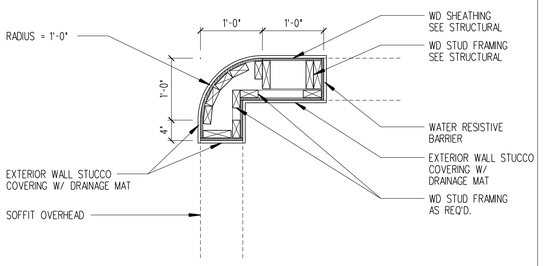

6 A-101 PLAN DETAIL 1"=1'-0"

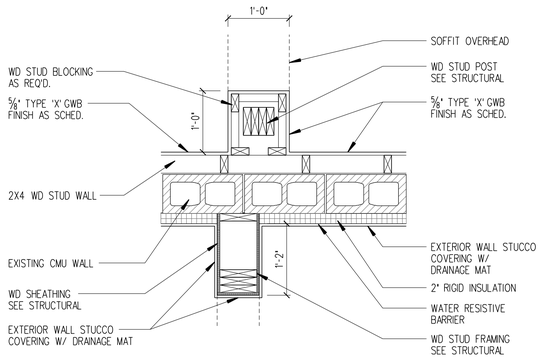

7 A-101 PLAN DETAIL 1"=1'-0"

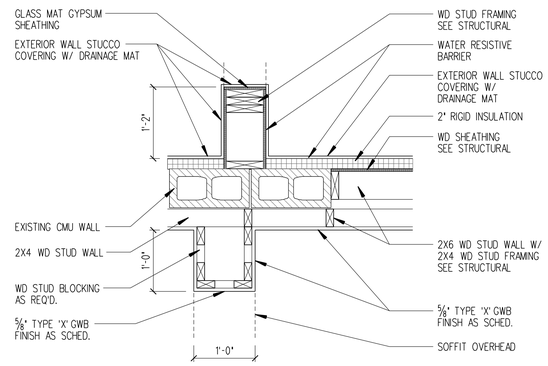

8 A-101 PLAN DETAIL 1"=1'-0"

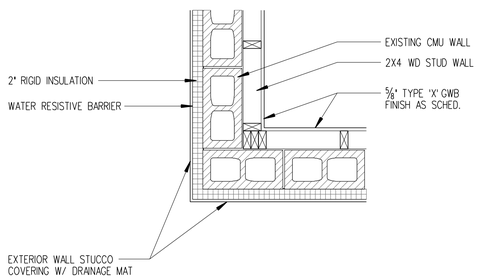

1 A-101 PLAN DETAIL 1"=1'-0"

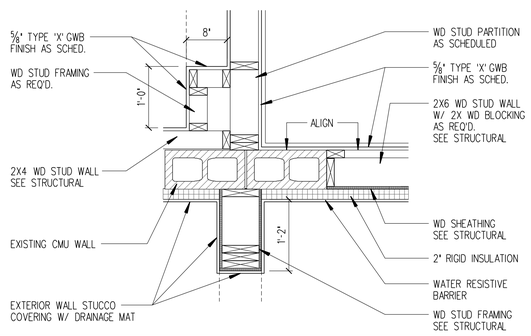

2 A-101 PLAN DETAIL 1"=1'-0"

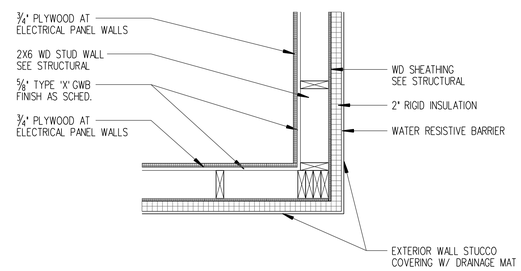

3 A-101 PLAN DETAIL 1"=1'-0"

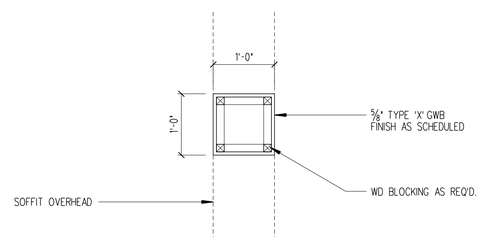

4 A-101 PLAN DETAIL 1"=1'-0"

NEWBERRY COUNTY AIRPORT

TERMINAL RENOVATION & EXPANSION

STATE OF SOUTH CAROLINA
THE WILSON GROUP ARCHITECTS
Charlotte, NC
03022
REGISTERED ARCHITECTS

STATE OF SOUTH CAROLINA
BRIAN K. WILSON
Charlotte, NC
6451
REGISTERED ARCHITECT
5-1-18

ARCHITECT

THE WILSON GROUP

P O BOX 5510
CHARLOTTE, NC 28299
(704) 331-9747

PROJECT MANAGER I CIVIL ENGINEER

TALBERT, BRIGHT & ELLINGTON

2000 PARK STREET, SUITE 101
COLUMBIA, SC 29201
(803) 933-9290

STRUCTURAL ENGINEER

STEWART

101 N. TRYON ST., SUITE 1400
CHARLOTTE, NC 28202
(704) 909-3523

MECHANICAL, ELECTRICAL, & PLUMBING ENGINEER

SABER ENGINEERING

2923 S. TRYON ST., SUITE 280
CHARLOTTE, NC 28203
(704) 373-0068

REVISIONS

DATE MAY 1, 2018

PROJECT NUMBER 9198-000

SHEET TITLE

ARCHITECTURAL DETAILS

SHEET NUMBER

A-601

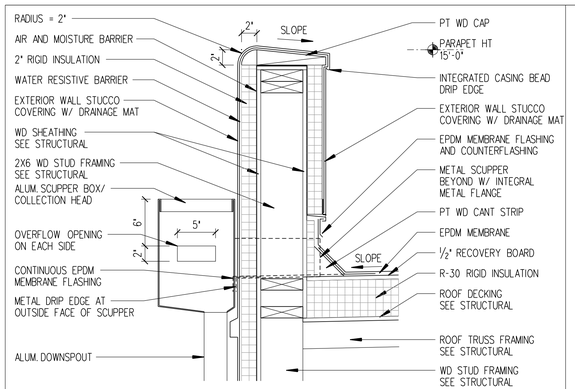

16 A-401 SECTION DETAIL 1 1/2" = 1'-0"

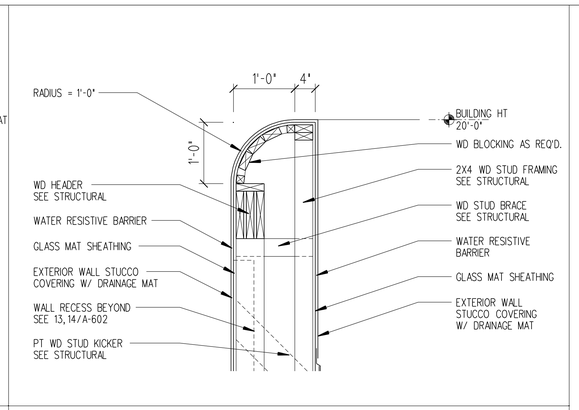

17 A-551 SECTION DETAIL 1" = 1'-0"

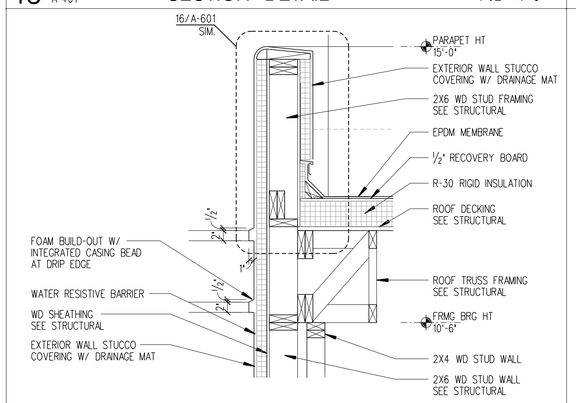

11 A-551 SECTION DETAIL 1" = 1'-0"

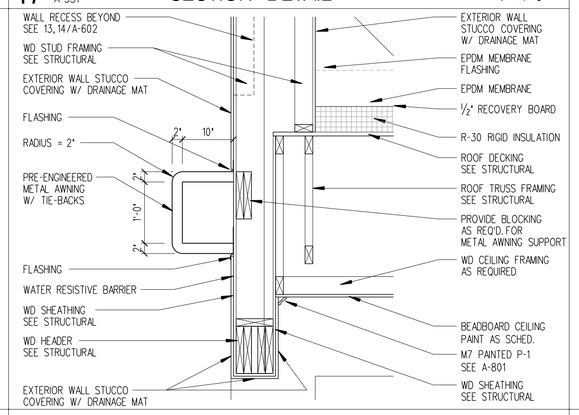

12 A-551 SECTION DETAIL 1" = 1'-0"

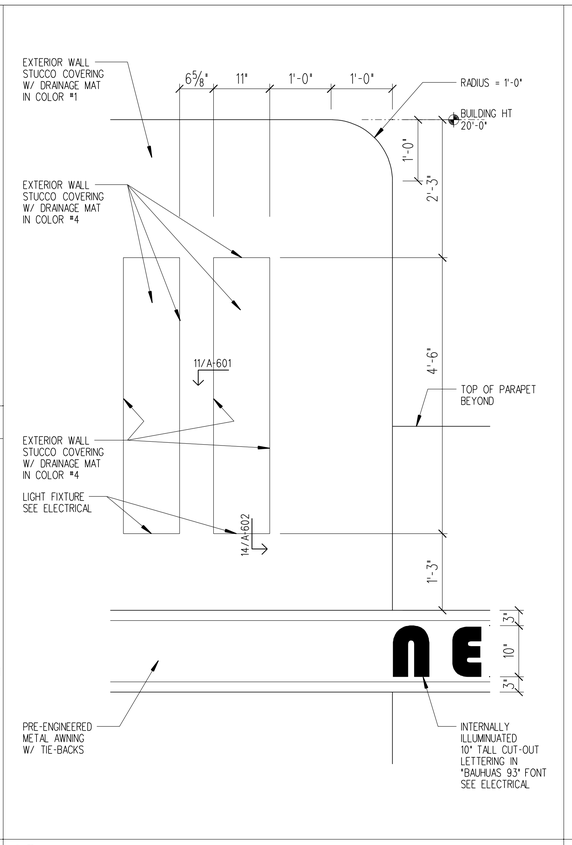

13 A-401 ELEVATION DETAIL 1" = 1'-0"

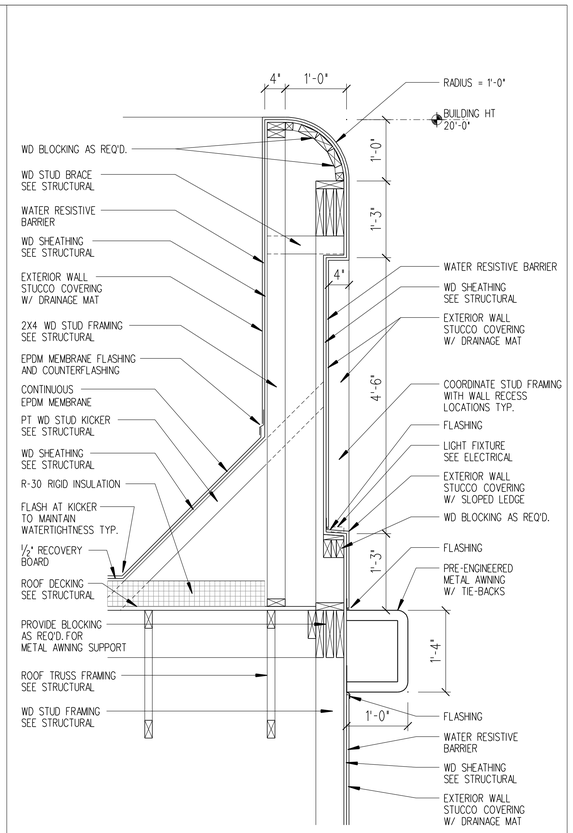

14 A-401 SECTION DETAIL 1" = 1'-0"

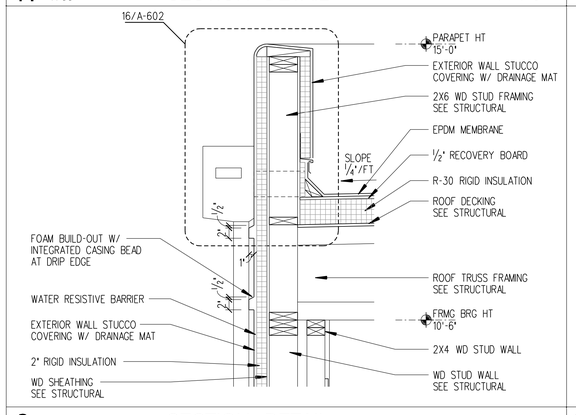

6 A-551 SECTION DETAIL 1" = 1'-0"

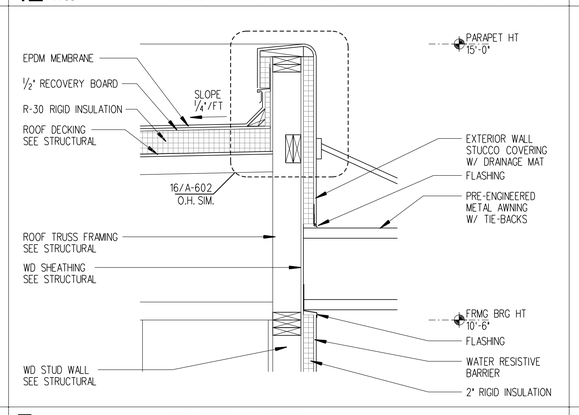

7 A-551 SECTION DETAIL 1" = 1'-0"

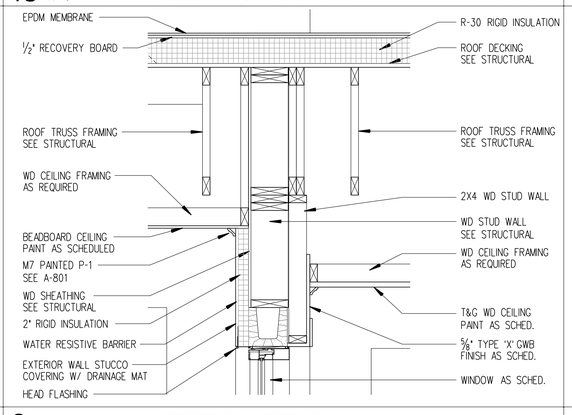

8 A-551 SECTION DETAIL 1" = 1'-0"

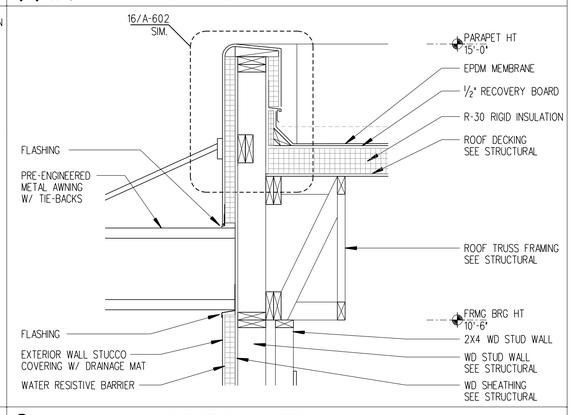

9 A-551 SECTION DETAIL 1" = 1'-0"

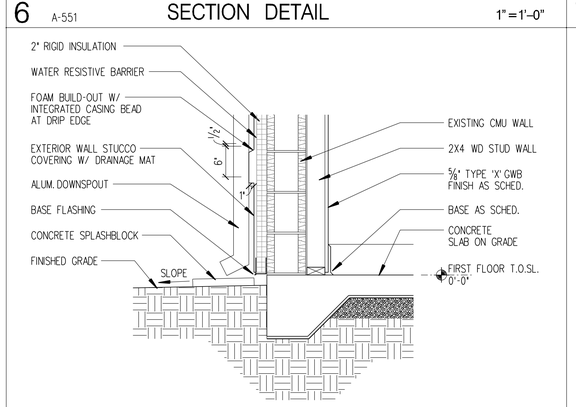

1 A-551 SECTION DETAIL 1" = 1'-0"

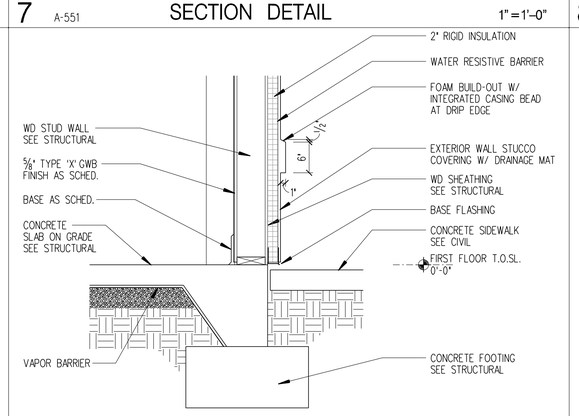

2 A-551 SECTION DETAIL 1" = 1'-0"

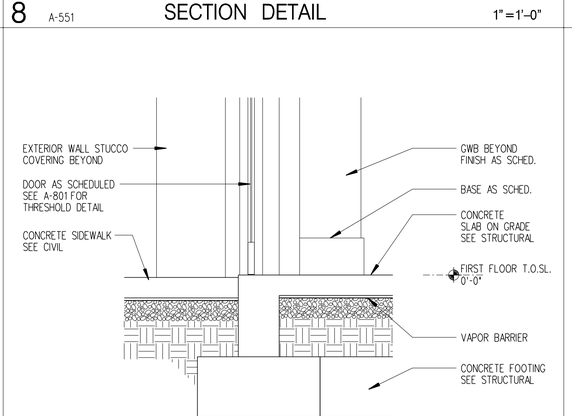

3 A-551 SECTION DETAIL 1" = 1'-0"

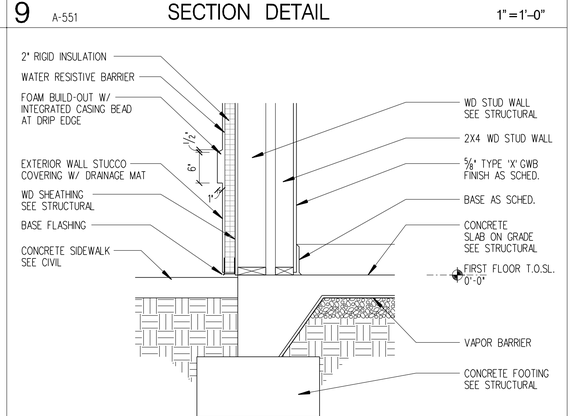

4 A-551 SECTION DETAIL 1" = 1'-0"

NEWBERRY COUNTY AIRPORT

TERMINAL RENOVATION & EXPANSION

STATE OF SOUTH CAROLINA — THE WILSON GROUP ARCHITECTS, Charlotte, NC 03022 — REGISTERED ARCHITECTS

STATE OF SOUTH CAROLINA — BRIAN K. WILSON, Charlotte, NC 6451 — REGISTERED ARCHITECT — 5.1.18

ARCHITECT

THE WILSON GROUP
P O BOX 5510
CHARLOTTE, NC 28299
(704) 331-9747

PROJECT MANAGER I CIVIL ENGINEER
TALBERT, BRIGHT & ELLINGTON
2000 PARK STREET, SUITE 101
COLUMBIA, SC 29201
(803) 933-9290

STRUCTURAL ENGINEER
STEWART
101 N. TRYON ST., SUITE 1400
CHARLOTTE, NC 28202
(704) 909-3523

MECHANICAL, ELECTRICAL, & PLUMBING ENGINEER
SABER ENGINEERING
2923 S. TRYON ST., SUITE 280
CHARLOTTE, NC 28203
(704) 373-0068

REVISIONS

DATE	MAY 1, 2018
PROJECT NUMBER	9198-000

SHEET TITLE

ARCHITECTURAL DETAILS

SHEET NUMBER

A-602

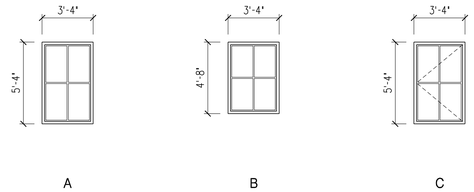

20 WINDOW ELEVATIONS 1/4" = 1'-0"

WINDOW SCHEDULE

LEGEND	SIZE (WXH)	TYPE	FRAME MATERIAL	GLASS TYPE	JAMB	HEAD	SILL
A	3'-4"X5'-4"	FIXED	ALUM.	GL-1	2/A-801, 8/A-801	1/A-801, 4/A-801, 5/A-801	3/A-801, 6/A-801, 7/A-801
B	3'-4"X4'-8"	FIXED	ALUM.	GL-1	2/A-801, 8/A-801	1/A-801, 4/A-801, 5/A-801	3/A-801, 6/A-801, 7/A-801
C	3'-4"X5'-4"	CASEMENT	ALUM.	GL-1	2/A-801	1/A-801	3/A-801

WINDOW NOTES

1. HEADER HEIGHTS PER ELEVATIONS.
2. SEE DETAILS FOR ADDITIONAL JAMB DETAIL INFORMATION.
3. COORDINATE SILL/JAMB EXTENSIONS WITH ACTUAL WALL DEPTH.
4. INSTALL LOUVER BLINDS AT EACH WINDOW LOCATION U.N.O.
5. SEE FLOOR PLAN FOR CASEMENT WINDOW OPENING ORIENTATION.
6. PROVIDE OPERATING HARDWARE FOR CASEMENT WINDOWS AS REQUIRED.
7. WINDOW FINISH COLOR TO MATCH ALUM. ENTRANCE DOOR FINISH.

GLAZING LEGEND

GLAZING (GL)

GLASS TYPE 1 - TYPICAL EXTERIOR GLASS U.N.O. SEE SPECIFICATIONS
TEMPERED WHERE INDICATED ON SCHEDULE
GLAZING TO BE TEMPERED AT BATH 106.

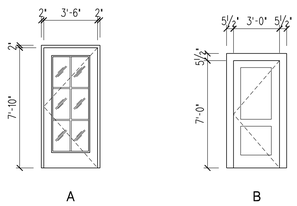

16 DOOR ELEVATIONS 1/4" = 1'-0"

DOOR SCHEDULE

ROOM NO.	ROOM NAME	DOOR NO.	SIZE (WxH)	ELEV.	DOOR MATERIAL	DOOR FINISH	FRAME MATERIAL	FRAME FINISH	JAMB DETAIL	HEAD DETAIL	THRESHOLD	FIRE RATING	COMMENTS
	FIRST LEVEL												
101	LOBBY	X, Y	3'-6"X7'-10"	A	ALUM. & TEMP. GLASS	POWDER COATED	ALUM.	POWDER COATED, P-2	2/A-801	1/A-801	11/A-801	0	
103	PLANNING	X	3'-0"X7'-0"	B	SC COMP WOOD	P-1	WOOD	P-1	10/A-801	9/A-801	12/A-801	0	
104	QUIET ROOM	X	3'-0"X7'-0"	B	SC COMP WOOD	P-1	WOOD	P-1	10/A-801	9/A-801	N/A	0	
106	BATHROOM	X	3'-0"X7'-0"	B	SC COMP WOOD	P-1	WOOD	P-1	10/A-801	9/A-801	12/A-801	0	
107	JANITOR	X	3'-0"X7'-0"	B	SC COMP WOOD	P-1	WOOD	P-1	10/A-801	9/A-801	12/A-801	0	
108	UTILITY	X	3'-0"X7'-0"	B	SC COMP WOOD	P-1	WOOD	P-1	10/A-801	9/A-801	12/A-801	0	

NOTES:
1. SEE SPECIFICATIONS IN PROJECT MANUAL FOR DOOR HARDWARE SCHEDULE.
2. ARCHITECT TO SELECT DOOR AND FRAME FINISH COLOR FROM MANUFACTURER'S RULL RANGE; SEE SPECIFICATIONS.

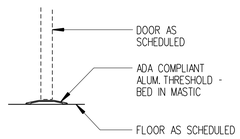

11 THRESHOLD DETAIL 1 1/2" = 1'-0"

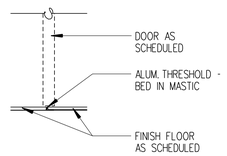

12 THRESHOLD DETAIL 1 1/2" = 1'-0"

MOULDING LEGEND

NAME	DESCRIPTION
M1	5/8" X 5 1/2" PINE BASE
M2	5/8" PINE QUARTER-ROUND
M3	5/8" X 5 1/2" MDF TRIM
M4	5 1/4" X 5/8" SILL (VERIFY LENGTH IN FIELD)
M5	1 5/8" X 5/8" SILL (VERIFY LENGTH IN FIELD)
M6	3 1/8" X 3 1/8" PINE CROWN MOULDING
M7	2 1/4" X 2 1/4" FIBER CEMENT CROWN MOULDING (EXTERIOR)

NOTES: 1. ALL DIMENSIONS ARE ACTUAL FINISHED SIZES, NOT NOMINAL.
2. WOOD FLOOR BASE TO CONSIST OF M1 AND M2.
3. ALL TRIM TO BE PRIMED AND PAINTED U.N.O.

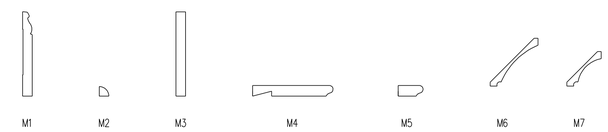

13 MOULDING LEGEND 3" = 1'-0"

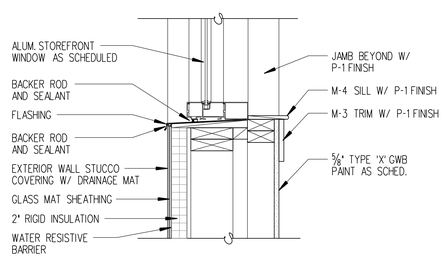

6 SILL DETAIL AT WINDOW 1 1/2" = 1'-0"

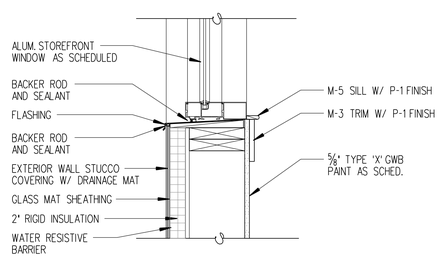

7 SILL DETAIL AT WINDOW 1 1/2" = 1'-0"

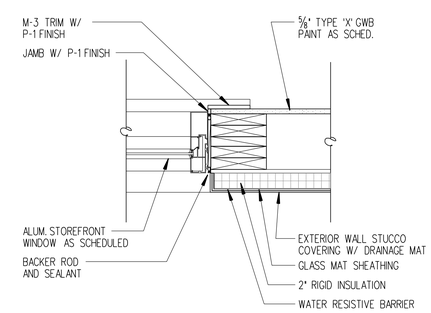

8 JAMB DETAIL AT WINDOW 1 1/2" = 1'-0"

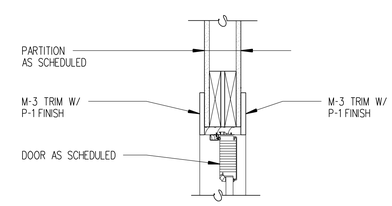

9 HEAD DETAIL AT DOOR 1 1/2" = 1'-0"

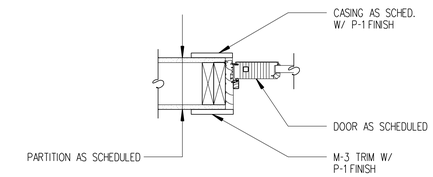

10 JAMB DETAIL AT DOOR 1 1/2" = 1'-0"

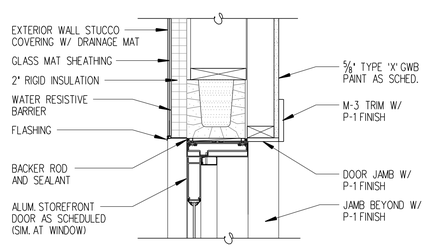

1 HEAD DETAIL AT DOOR/WINDOW 1 1/2" = 1'-0"

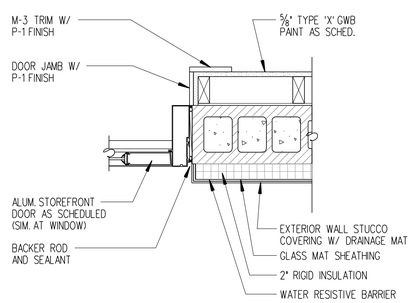

2 JAMB DETAIL AT DOOR/WINDOW 1 1/2" = 1'-0"

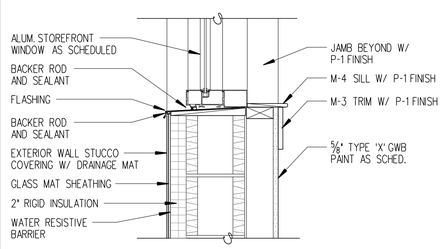

3 SILL DETAIL AT WINDOW 1 1/2" = 1'-0"

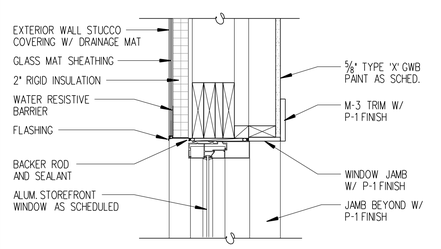

4 HEAD DETAIL AT WINDOW 1 1/2" = 1'-0"

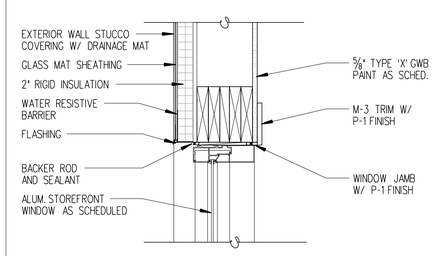

5 HEAD DETAIL AT WINDOW 1 1/2" = 1'-0"

NEWBERRY COUNTY AIRPORT

TERMINAL RENOVATION & EXPANSION

STATE OF SOUTH CAROLINA
THE WILSON GROUP ARCHITECTS
Charlotte, NC
03022
REGISTERED ARCHITECTS

STATE OF SOUTH CAROLINA
BRIAN R. WILSON
Charlotte, NC
6451
REGISTERED ARCHITECT
5-1-18

ARCHITECT

THE WILSON GROUP
P O BOX 5510
CHARLOTTE, NC 28299
(704) 331-9747

PROJECT MANAGER | CIVIL ENGINEER
TALBERT, BRIGHT & ELLINGTON
2000 PARK STREET, SUITE 101
COLUMBIA, SC 29201
(803) 933-9290

STRUCTURAL ENGINEER
STEWART
101 N. TRYON ST., SUITE 1400
CHARLOTTE, NC 28202
(704) 909-3523

MECHANICAL, ELECTRICAL, & PLUMBING ENGINEER
SABER ENGINEERING
2923 S. TRYON ST., SUITE 280
CHARLOTTE, NC 28203
(704) 373-0068

REVISIONS

DATE	MAY 1, 2018
PROJECT NUMBER	9198-000

SHEET TITLE

ARCHITECTURAL DOOR AND WINDOW SCHEDULES

SHEET NUMBER

A-801

FINISH LEGEND

FLOORING (CPT = CARPET) (PT = PORCELAIN TILE) (SDT = STATIC DISSIPATIVE TILE)

PT-1	DALTILE: MODERNIST SERIES: COLOR MD85 BERTOIA WHITE, 24"X24" PORCELAIN FLOOR TILE
CPT-1	SHAW CONTRACT GROUP: STYLE: CONTOUR 5A186: COLOR: CARBON 86585: BROADLOOM CARPET
SDT-1	ARMSTRONG: 51956 FOSSIL GRAY ELECTROSTATIC DISSIPATIVE TILE, 12"X12"

BASE (RB = RUBBER BASE)

RB-1	FLEXCO 4" COVED RUBBER WALL BASE: COLOR TO BE 070 INGOT GRAY
M1	WOOD FLOOR BASE, PAINTED: SEE A-801 FOR PROFILE

WALL TILE (CWT = CERAMIC WALL TILE)

CWT-1	DALTILE: RETROSPACE SERIES: COLOR MODERN WHITE RS30 6"X6" HEXAGONAL, GLAZED CERAMIC WALL TILE
CWT-2	DALTILE: RETROSPACE SERIES: COLOR MERCURY GREY RS31 6"X6" HEXAGONAL, GLAZED CERAMIC WALL TILE
CWT-3	DALTILE: RETROSPACE SERIES: COLOR SKY BLUE RS33 6"X6" HEXAGONAL, GLAZED CERAMIC WALL TILE

PAINT (P = PAINT) (SEE A-401 FOR STUCCO COLOR LOCATIONS)

P-1	SHERWIN WILLIAMS SW7015 REPOSE GRAY (LRV 58%)
P-2	STUCCO COLOR #1: ARCHITECT TO SELECT SHERWIN WILLIAMS COLOR FROM FULL RANGE
P-3	STUCCO COLOR #2: ARCHITECT TO SELECT SHERWIN WILLIAMS COLOR FROM FULL RANGE
P-4	STUCCO COLOR #3: ARCHITECT TO SELECT SHERWIN WILLIAMS COLOR FROM FULL RANGE
P-5	STUCCO COLOR #4: ARCHITECT TO SELECT SHERWIN WILLIAMS COLOR FROM FULL RANGE

CEILINGS (GWB = GYPSUM WALL BOARD) (ACP = ACOUSTICAL CEILING PANEL) (BBD = BEADBOARD PANEL)

GWB-1	5/8" TYPE 'X' GYPSUM WALL BOARD: FINISH AS SCHEDULED
ACP-1	USG: MARS CLIMAPLUS: WHITE: 2'X2' LAY-IN ACOUSTICAL PANEL SYSTEM W/ DX SQUARE EDGE SUSPENSION GRID
BBD-1	4'X8'X1/2" BEADBOARD PANEL, PAINT P-1: ORIENT PANELS AS SHOWN ON A3.01

COUNTERTOPS (SS = SOLID SURFACE)

SS-1	HANSTONE QUARTZ: ROYALE BLANC BA205

MISCELLANEOUS (PLAM = PLASTIC LAMINATE) (WPS=WALL PANEL SYSTEM) (FRP = FIBERGLASS REINFORCED PANEL) (EP = EDGE PROTECTION) (GT = GROUT COLOR)

1X6 T&G PINE INTERIOR SIDING, PAINT AS SCHEDULED: SEE INTERIOR ELEVATIONS AND RCP FOR LOCATIONS. SEE SPECIFICATIONS.	
PLAM-1	WILSONART LAMINATE: 4830K-18 SATIN STAINLESS: LINEARITY GRAIN FINISH WITH AEON
FRP-1	MARLITE: SMOOTH SURFACE PANEL: S 490N LIGHT GREY: PVC TRIM ACCESSORIES TO MATCH PANEL COLOR
EP-1	SCHLUTER SYSTEMS: ROUNDED EDGE: RONDEC RO100AE: 100 (3/8"): ANODIZED ALUMINUM, SATIN FINISH
EP-2	SCHLUTER SYSTEMS: ROUNDED OUTSIDE CORNER: RONDEC RO100AE: 100 (3/8"): ANODIZED ALUMINUM, SATIN FINISH. FOR USE AT ALL OUTSIDE CORNERS WITH WALL TILE FINISH
GT-1	CUSTOM GROUT SOLUTIONS: ARCH TO SELECT COLOR. FOR USE AT PORCELAIN FLOOR TILE U.N.O.
GT-2	CUSTOM GROUT SOLUTIONS: ARCH TO SELECT COLOR. FOR USE AT CERAMIC WALL TILE U.N.O.

FINISH NOTES

1. GC TO PROVIDE COMPLIANCE DATA THAT INTERIOR WALL AND CEILING FINISHES COMPLY WITH CLASSIFICATION B: FLAME SPREAD 26-75 AND SMOKE DEVELOPED 0-450 FOR VERTICAL EXITS, EXIT PASSAGEWAYS, EXIT ACCESS CORRIDORS AND OTHER EXITWAYS.
2. GC TO PROVIDE COMPLIANCE DATA THAT INTERIOR WALL AND CEILING FINISHES COMPLY WITH CLASSIFICATION C: FLAME SPREAD 76-200 AND SMOKE DEVELOPED 0-450 FOR ROOMS AND ENCLOSED SPACES.
3. GC TO PROVIDE COMPLIANCE DATA FOR INTERIOR FLOOR FINISHES THAT SHOWS COMPLIANCE WITH NC804.
4. FLOOR FINISHES MUST MEET SLIP RESISTANCE REQUIREMENT OF 0.60 WET, AND BE A MINIMUM OF CLASS II PER NFPA 253.
5. WHERE INDICATED ON ARCHITECTURAL FLOOR PLAN WITH "CG" PROVIDE CORNER GUARD PER SPECIFICATIONS. COLOR TO BE SELECTED BY ARCHITECT.

FINISH SCHEDULE

		FLOOR	BASE	WALLS								CEILING	
				PLAN NORTH		PLAN EAST		PLAN SOUTH		PLAN WEST			
ROOM NO.	ROOM NAME	MATERIAL	MATERIAL	MATERIAL	FINISH	MATERIAL	FINISH	MATERIAL	FINISH	MATERIAL	FINISH	MATERIAL	FINISH
	FIRST LEVEL												
101	LOBBY	PT-1	SEE A-451	SEE A-451		SEE A-451		SEE A-451		SEE A-451		SEE A-201	P-1
102	LOUNGE	CPT-1	SEE A-451	SEE A-451		SEE A-451		SEE A-451		SEE A-451		SEE A-201	P-1
103	PLANNING	CPT-1	RB-1	GWB	P-1	GWB	P-1	GWB	P-1	GWB	P-1	ACP-1	
104	QUIET ROOM	CPT-1	RB-1	GWB	P-1	GWB	P-1	GWB	P-1	GWB	P-1	ACP-1	
105	KITCHEN	PT-1	M1 - SEE A-801	GWB	P-1	GWB	P-1	GWB	P-1	GWB	P-1	ACP-1	
106	BATH	PT-1	SEE A-452	SEE A-452		SEE A-452		SEE A-452		SEE A-452		ACP-1	
107	JANITOR	PT-1	RB-1	SEE A-451		SEE A-451		GWB/FRP-1	P-1	GWB/FRP-1	P-1	ACP-1	
108	UTILITY	SDT-1	RB-1	GWB	P-1	GWB	P-1	GWB	P-1	GWB	P-1	ACP-1	

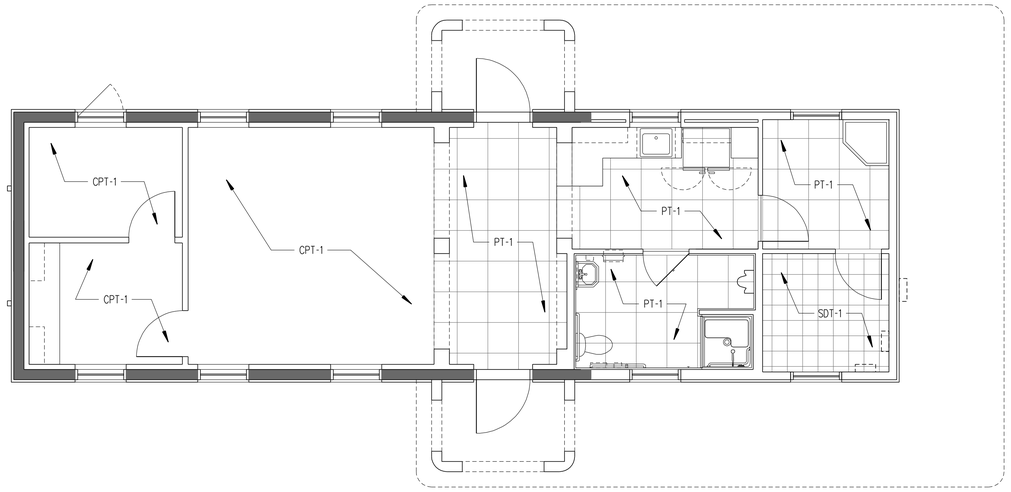

1 ARCHITECTURAL FINISH FLOOR PLAN

1/4" = 1'-0"

NEWBERRY COUNTY AIRPORT

TERMINAL RENOVATION & EXPANSION

STATE OF SOUTH CAROLINA
THE WILSON GROUP ARCHITECTS
Charlotte, NC
03022
REGISTERED ARCHITECTS

STATE OF SOUTH CAROLINA
BRIAN K. WILSON
Charlotte, NC
6451
REGISTERED ARCHITECT
5-1-18

ARCHITECT

THE WILSON GROUP

P O BOX 5510
CHARLOTTE, NC 28299
(704) 331-9747

PROJECT MANAGER | CIVIL ENGINEER

TALBERT, BRIGHT & ELLINGTON

2000 PARK STREET, SUITE 101
COLUMBIA, SC 29201
(803) 933-9290

STRUCTURAL ENGINEER

STEWART

101 N. TRYON ST., SUITE 1400
CHARLOTTE, NC 28202
(704) 909-3523

MECHANICAL, ELECTRICAL, & PLUMBING ENGINEER

SABER ENGINEERING

2923 S. TRYON ST., SUITE 280
CHARLOTTE, NC 28203
(704) 373-0068

REVISIONS

DATE	MAY 1, 2018
PROJECT NUMBER	9198-000

SHEET TITLE

ARCHITECTURAL FINISH PLAN & FINISH SCHEDULE

SHEET NUMBER

A-901

PLUMBING GENERAL NOTES

1. FURNISH ALL LABOR, MATERIAL, AND EQUIPMENT REQUIRED FOR THE COMPLETION AND OPERATION OF ALL SYSTEMS IN THIS SECTION OF WORK IN ACCORDANCE WITH ALL APPLICABLE CODES.
2. ALL PLUMBING FIXTURES AND PLUMBING SYSTEM EQUIPMENT SHALL BE PROVIDED COMPLETE WITH ALL ACCESSORIES, HANGERS, VALVES, STOPS, TAILPIECES, TRAPS, FAUCETS, STRAINERS, ETC. SEE FIXTURE SCHEDULE.
3. FURNISH AND INSTALL COMPLETE SYSTEMS OF SOIL, WASTE, VENT, HOT AND COLD WATER PIPING FROM ALL PLUMBING FIXTURES, AND/OR OTHER EQUIPMENT.
4. CLEANOUT PLUGS SHALL BE INSTALLED IN ACCORDANCE WITH PLUMBING CODE REQUIREMENTS. PROVIDE CLEANOUTS AT THE BASE OF ALL WASTE STACKS, AT EVERY FOUR 45 DEGREE TURNS, AND AT EVERY 100 FEET. CLEANOUTS SHALL BE PLACED IN READILY ACCESSIBLE LOCATIONS.
5. ALL SOIL, WASTE, AND VENT LINES SHALL BE CONCEALED IN THE BUILDING CONSTRUCTION.
6. COPPER PIPING SHALL BE PROTECTED AGAINST CONTACT WITH MASONRY OR DISSIMILAR METALS. ALL HANGERS, SUPPORTS, ANCHORS, AND CLIPS SHALL BE COPPER OR COPPER PLATED. WHERE COPPER PIPING IS CARRIED ON IRON TRAPEZE HANGERS WITH OTHER PIPING, SATISFACTORY AND PERMANENT ELECTROLYTIC ISOLATION MATERIAL SHALL PROTECT THE COPPER AGAINST CONTACT WITH OTHER METALS.
7. WHERE COPPER PIPING IS SLEEVED THROUGH MASONRY, SLEEVES SHALL BE COPPER OR RED BRASS. WHERE COPPER MUST BE CONCEALED IN A MASONRY PARTITION OR AGAINST MASONRY, CONTACT SHALL BE PREVENTED BY COATING THE COPPER HEAVILY WITH ASPHALTIC ENAMEL AND PROVIDING 15# ASPHALT SATURATED FELT BETWEEN THE PIPE AND MASONRY.
8. THE PLUMBING CONTRACTOR SHALL COORDINATE CLOSELY WITH THE MECHANICAL AND THE ELECTRICAL CONTRACTORS TO AVOID CONFLICT WITH OTHER TRADES.
9. CEILING AREA HAS LIMITED SPACE. CONTRACTOR MUST COORDINATE WITH OTHER TRADES FOR ALL STRUCTURES, PIPING, CONDUIT, DUCTWORK, LIGHTING, ETC. TO PROPERLY BE INSTALLED.
10. ALL PIPE INSULATION SHALL RUN CONTINUOUSLY THROUGH FLOORS, WALLS, AND PARTITIONS.
11. PROVIDE DRAIN VALVES IN THE HOT AND COLD WATER SYSTEM AT ALL LOW POINTS TO ALLOW FOR COMPLETE DRAINAGE.
12. VACUUM BREAKERS SHALL BE PROVIDED FOR ALL FIXTURES TO WHICH HOSES MAY BE ATTACHED. VACUUM BREAKERS SHALL BE PERMANENTLY ATTACHED.
13. WASTE AND VENT PIPING SHALL BE AS FOLLOWS:

    BELOW SLAB: SCHEDULE 40, PVC SOLID WALL PIPE, PVC SOCKET FITTINGS, AND SOLVENT-CEMENTED FITTINGS.
    ABOVE SLAB: SCHEDULE 40, PVC SOLID WALL PIPE, PVC SOCKET FITTINGS, AND SOLVENT-CEMENTED FITTINGS. ½" INSULATION IS REQUIRED ON ALL HORIZONTAL RUNS ABOVE NOISE SENSITIVE AREAS.
14. DOMESTIC WATER PIPING SHALL BE AS FOLLOWS:

    BELOW SLAB: TYPE "K" COPPER.
    ABOVE SLAB: CPVC "FLOWGUARD GOLD".
    ABOVE SLAB: TYPE "L" COPPER MUST BE USED IN MECHANICAL/WATER HEATER ROOMS.
    ALTERNATE: PEX-A "UPONOR" (OR EQUAL) WITH "UPONOR, PROPEX" FITTINGS (OR EQUAL).
15. INSULATION IS REQUIRED ON HOT WATER RECIRC SYSTEM PIPING. PROVIDE IN ACCORDANCE WITH STATE ENERGY CODE OR PER LOCAL JURISDICTION. INSULATE WITH CLOSED-CELL ELASTOMERIC MATERIAL.
16. INVERT ELEVATIONS SHALL BE ESTABLISHED AND VERIFIED BEFORE WASTE PIPING IS INSTALLED SO THAT PROPER SLOPES WILL BE MAINTAINED.
17. THE PLUMBING CONTRACTOR SHALL PROVIDE WATER HAMMER PROTECTION ON ALL WATER DISTRIBUTION PIPING WHERE QUICK-CLOSING VALVES ARE UTILIZED. INSTALLATION OF AIR CHAMBERS OR SHOCK ARRESTORS SHALL BE IN ACCORDANCE WITH PDI-WH201. SEE SHOCK ARRESTOR SCHEDULE (IF PROVIDED).
18. PROVIDE FULL PORT VALVES IN ALL BRANCH LINES OF THE HOT AND COLD WATER DISTRIBUTION SYSTEM ON ¾" AND LARGER CW & HW AND AS SHOWN ON PLANS, RISERS, AND SCHEMATIC DETAILS.
19. REFER TO ARCHITECTURAL DRAWINGS FOR MOUNTING HEIGHTS OF PLUMBING FIXTURES.
20. PROVIDE ACCESS DOORS FOR ALL VALVES AND DEVICES REQUIRING ACCESS WHEN LOCATED IN WALLS OR ABOVE INACCESSIBLE CEILING CONSTRUCTION.
21. PROVIDE DEEP SEAL TRAPS FOR ALL FLOOR DRAINS.
22. REFER TO APPENDIX B FOR SITE SEISMIC CLASSIFICATION. A COMPLETE SYSTEM OF SEISMIC RESTRAINTS SHALL BE DESIGNED BY MASON INDUSTRIES (OR EQUAL) & SEALED BY THEIR REGISTERED ENGR & INSTALLED BY THIS CONTR. AS REQ'D BY APPLICABLE CODES FOR THE LOCALE OF THIS PROJECT. SEISMIC RESTRAINTS FOR SEISMIC CLASSES D, E, AND F SHALL BE SUBMITTED TO THE DESIGN PROFESSIONAL FOR REVIEW PRIOR TO INSTALLATION.
23. PROVIDE A U.L. LISTED ASSEMBLY FOR ALL PENETRATIONS THRU FIRE RATED WALLS AND FLOORS.
24. PROVIDE PRESSURE REDUCING VALVE SET AT 80 PSI.
25. ALL SUSPENDED MATERIALS AND EQUIPMENT SHALL BE INDIVIDUALLY SUPPORTED FROM THE BUILDING STRUCTURE. DO NOT SUSPEND ITEMS FROM THE CEILING OR ITS SUPPORT SYSTEM.

PLUMBING LEGEND

- DOMESTIC COLD WATER PIPING
- DOMESTIC HOT WATER PIPING
- VENT PIPING
- SAN — WASTE (SANITARY SEWER)
- FULL PORT VALVE
- CHECK VALVE
- PIPE UP
- PIPE DOWN
- FLOOR DRAIN
- CONNECT TO EXISTING

AAV	"STUDOR" AIR ADMITTANCE VALVE
ABV	ABOVE
AFF	ABOVE FINISHED FLOOR
CW	COLD WATER
DN	DOWN
E.C.	ELECTRICAL SUB-CONTRACTOR
FCO	FLOOR CLEAN OUT
FD	FLOOR DRAIN
FR	FROM
FS	FLOOR SINK
G.C.	GENERAL CONTRACTOR
HB	HOSE BIBB
HD	HUB DRAIN
HW	HOT WATER
M.C.	MECHANICAL SUB-CONTRACTOR
P.C.	PLUMBING SUB-CONTRACTOR
V	VENT
W	WASTE

SHOCK ARRESTOR SCHEDULE

P.D.I. SIZE	FIXTURE UNITS	MANUFACTURER OR EQUAL
SA'A'	1 - 11	ZURN, SMITH, PPI, SIOUX-CHIEF
SA'B'	12 - 32	"

LOCATE SHOCK ARRESTORS IN AN ACCESSIBLE LOCATION, OR PROVIDE SIOUX-CHIEF SHOCK ARRESTORS ONLY.
PROVIDE SHOCK ARRESTORS AS INDICATED PER SCHEDULE.
SHOCK ARRESTORS SHALL BE SAME SIZE AS PIPE INSTALLED ON, MINIMUM.

PLUMBING FIXTURE SPECIFICATIONS AND CONNECTION SCHEDULE

MARK	FIXTURE	TYPE	MANUFACTURER	MODEL NO.	MATERIAL	STYLE	FAUCET/VALVE				DRAIN		SUPPLIES AND STOPS	PIPE SIZES				MOUNTING	REMARKS
							MANUFACT. MODEL NO.	SPOUT	HANDLES	CENTERS	TYPE	SIZE		WASTE	VENT	CW	HW		
P-1	WATER CLOSET	FLUSH TANK	AMERICAN STANDARD	2111AA	VITREOUS CHINA	ADA ELONGATED	-	-	-	-	-	-	McGUIRE 165	3"	2"	½"	-	FLOOR	PROVIDE WITH OPEN FRONT SEAT WITH NO LID
P-2	LAVATORY	WALL HUNG	AMERICAN STANDARD	0355.012	VITREOUS CHINA	ADA ROUND	DELTA 590-PLGHDF	CENTERSET	SENSOR	4"	STRAINER	1½"	McGUIRE 175 WITH PM2125	2"	1½"	½"	½"	WALL HUNG	MOUNT AT ADA HEIGHT. SET FAUCET METERING AT 0.25 GPM PER CYCLE.
P-3	URINAL	FLUSH VALVE	AMERICAN STANDARD	6501.010	VITREOUS CHINA	ADA ELONGATED	SLOAN ROYAL 186-1-ADA	-	-	-	-	-	-	3"	1½"	¾"	-	WALL	MOUNT AT REQUIRED ADA HEIGHT
P-4	SHOWER	PREFAB	FLORESTONE	40-4041	FIBERGLASS	ADA 40" x 40"	SYMMONS PRESS. BALANCE	-	SINGLE LEVER	-	INTEGRAL	2"	-	2"	1½"	½"	½"	FLOOR	SEAT, GRAB BAR, PRESS. BAL. VALVE, HAND SPRAY, HOSE, SLIDE BAR, & DRAIN.
P-5	MOP SINK	FLOOR MOUNTED	FIAT	TSB-6002	MOLDED STRUCTURAL PLASTIC	ONE PIECE 36"X36"X12"	FIAT 830-AA	THREADED	TWO HANDLES	8"	-	-	-	3"	1½"	¾"	¾"	FLOOR	PROVIDE MOP HANGER, HOSE, HOSE BRACKET, AND VACUUM BREAKER.
P-6	BREAK SINK	SINGLE COMPT	ELKAY	LRAD-2522	STAINLESS STEEL	6½" DEEP 3-HOLE HANDICAPPED	ELKAY LK-230-BH-5	8" SWING	SINGLE LEVER	8"	CRUMB CUP	1½"	McGUIRE 175	2"	1½"	½"	½"	COUNTER TOP	PROVIDE WITH ELKAY LK-35, SPRAYER, & IN-SINK-ERATOR MODEL # 1 DISPOSAL 1/3HP, 120V.
P-7	REFRIGERATOR BOX	BOTTOM SUPPLY	OATEY	38574	PVC	RECESSED BOX	-	-	-	-	-	-	-	-	-	½"	-	WALL	SHUT-OFF VALVE AND THREADED CW CONNECTION.
FD	FLOOR DRAIN	SQUARE TOP	J.R. SMITH	2010	CAST IRON	NIKALOY TOP	-	-	-	-	-	-	-	-	-	-	-	FLOOR	PROVIDE WITH TRAP PRIMER CONNECTION WHERE INDICATED.
WCO	WALL CLEAN-OUT	ROUND COVER	J.R. SMITH	4472	CAST IRON	S.S. COVER	-	-	-	-	-	-	-	-	-	-	-	WALL	
FCO	FLOOR CLEAN-OUT	SQUARE TOP	J.R. SMITH	4040	CAST IRON	NICKEL BRONZE TOP	-	-	-	-	-	-	-	-	-	-	-	FLOOR	
GCO	GRADE CLEAN-OUT	ROUND TOP	J.R. SMITH	4240	CAST IRON	CAST IRON TOP	-	-	-	-	-	-	-	-	-	-	-	GRADE	PROVIDE WITH 24"x24"x8" THK CONCRETE PAD AT GRADE.
FPHB	HOSE BIBB	FREEZE PROOF	WOODFORD	B65	CAST BRASS	RECESSED BOX	-	-	-	-	-	-	-	-	-	¾"	-	WALL	
WH-1	WATER HEATER	ELECTRIC	STATE	PCE 50 20LSA	GLASS LINED	LOWBOY	-	-	-	-	-	-	-	-	-	SEE PLAN	SEE PLAN	SEE DETAIL	50 GAL. STORAGE, 4.5KW, 208V, 20 GPH REC AT 90°F RISE PROVIDE DRAIN PAN

NOTES:
1. CATALOG NUMBERS AND MANUFACTURERS ARE TO INDICATE TYPE AND QUALITY OF FIXTURE DESIRED. SUBMIT CUTSHEETS OF THESE AND ALTERNATE MANUFACTURERS FOR ARCHITECT AND OWNER APPROVAL PRIOR TO PURCHASE OF ANY FIXTURES. INFORMATION ON ALTERNATE FIXTURES PROPOSED BY THE CONTRACTOR SHALL INCLUDE THE ADD/DEDUCT ASSOCIATED WITH ACCEPTANCE OF THAT FIXTURE (OR THE ALTERNATE PACKAGE AS A WHOLE).

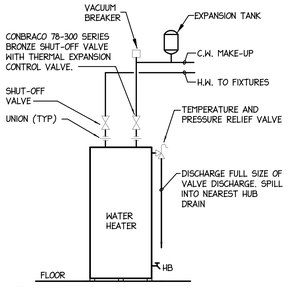

NOTE:
1. INSTALL WATER HEATER PER MANUFACTURER REQUIREMENTS.
2. PROVIDE HEAT TRAP ON CW AND HW LINES PER ENERGY CODE.

1 WATER HEATER DETAIL
NO SCALE

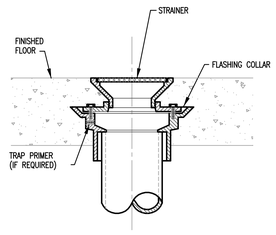

2 FLOOR DRAIN DETAIL
NO SCALE (FD)

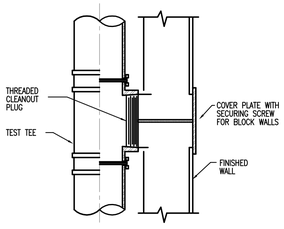

3 WALL CLEANOUT DETAIL
NO SCALE (WCO)

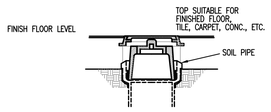

SECTION
CO , FCO – INTERIOR

4 INTERIOR CLEANOUT DETAIL
NO SCALE (FCO)

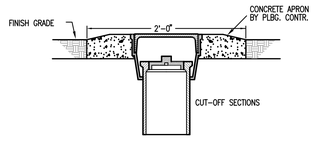

SECTION
GCO , YCO – EXTERIOR

5 EXTERIOR CLEANOUT DETAIL
NO SCALE (GCO)

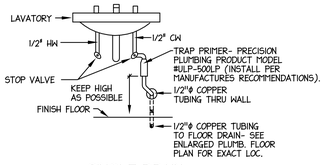

SINGLE DRAIN
TP-1

5 TRAP PRIMER DETAILS
NO SCALE

NOTE: TRAP PRIMERS SHALL MEET ASSE 1018 STANDARD.

SABER ENGINEERING
2923 South Tryon Street Suite 280
Charlotte, North Carolina 28203
tel 704.373.0068
MECHANICAL ELECTRICAL PLUMBING

SOUTH CAROLINA SABER ENGINEERING, P.A. CERTIFICATE OF AUTHORIZATION No. C02383

SOUTH CAROLINA REGISTERED PROFESSIONAL ENGINEER JAMES A. TRIBBLE May 01, 2018

FIRM NUMBER = C-2130

NEWBERRY COUNTY AIRPORT

NEW TERMINAL RENOVATION & EXPANSION

ARCHITECT

THE WILSON GROUP
P O BOX 5510
CHARLOTTE, NC 28299
(704) 331-8747

PROJECT MANAGER | CIVIL ENGINEER
TALBERT, BRIGHT & ELLINGTON
2000 PARK STREET, SUITE 101
COLUMBIA, SC 29201
(803) 933-9290

STRUCTURAL ENGINEER
STEWART
101 N. TRYON ST., SUITE 1400
CHARLOTTE, NC 28202
(704) 909-3523

MECHANICAL, ELECTRICAL, & PLUMBING ENGINEER
SABER ENGINEERING
2923 S. TRYON ST., SUITE 280
CHARLOTTE, NC 28203
(704) 373-0068

REVISIONS

DATE	MAY 1, 2018
PROJECT NUMBER	9198-000

SHEET TITLE
PLUMBING INFORMATION

SHEET NUMBER
P1

TAGGED NOTES - THIS SHEET

1. TIE INTO EXISTING SEPTIC SYSTEM
2. EXISTING SEPTIC SYSTEM. EXACT LOCATION TO BE FIELD VERIFIED.
2. FIELD VERIFY EXACT TIE-IN LOCATION WITH CIVIL. EXTEND AND CONNECT AS NECESSARY. 25 GPM AT 35 PSI REQUIRED AT FACE OF BUILDING.

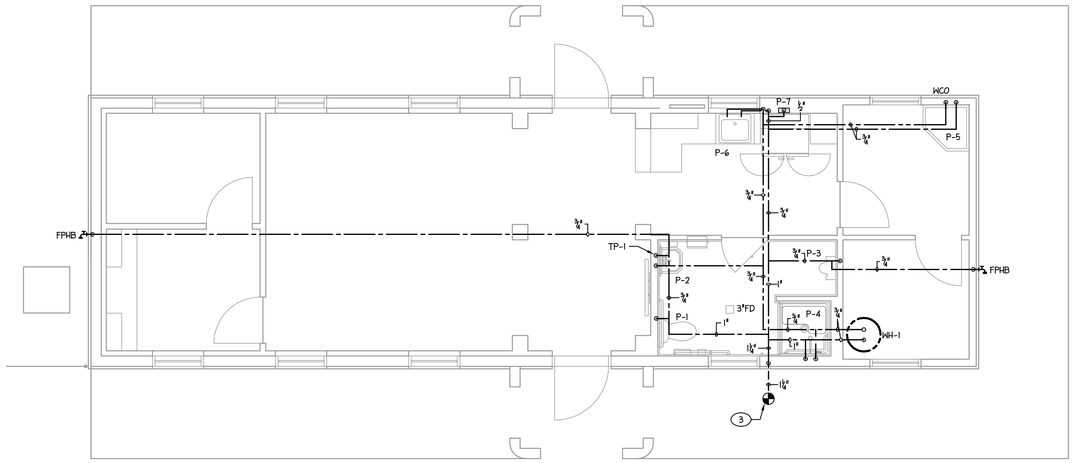

1 PLUMBING SUPPLY PLAN
1/4" =1'-0"

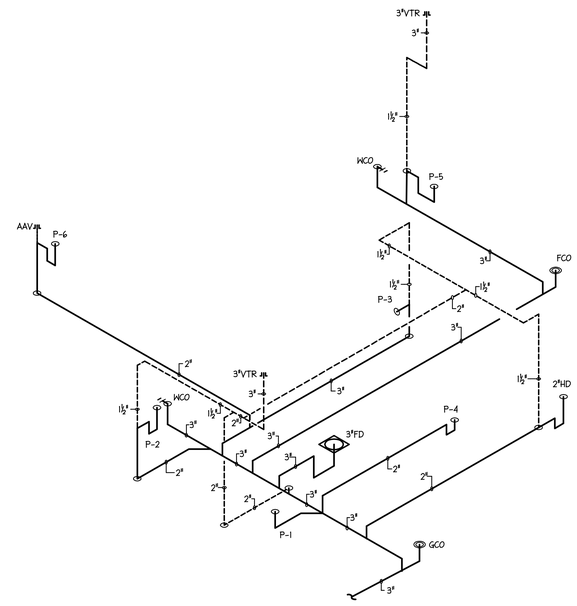

3 PLUMBING WASTE/VENT RISER
NO SCALE

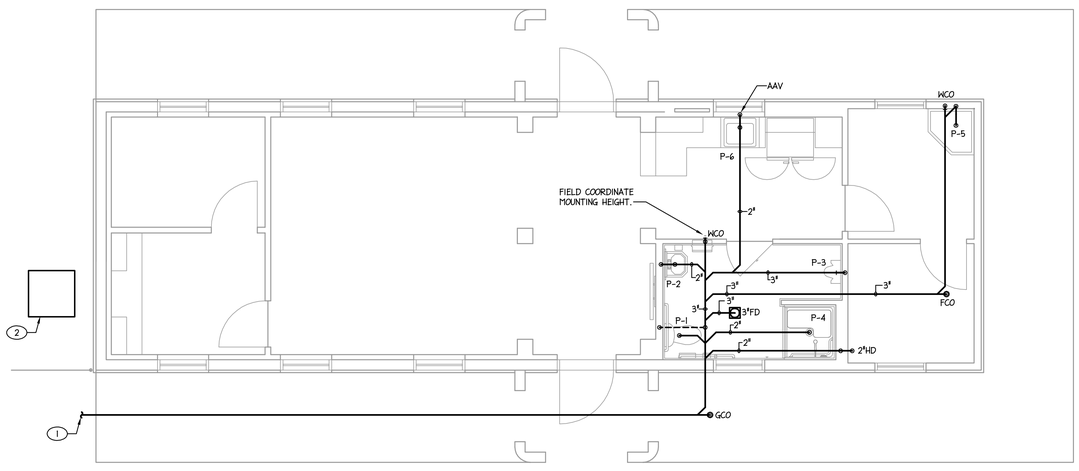

1 PLUMBING WASTE PLAN
1/4" =1'-0"

SABER ENGINEERING
2923 South Tryon Street Suite 280
Charlotte, North Carolina 28203
tel 704.373.0068
MECHANICAL ELECTRICAL PLUMBING

SOUTH CAROLINA SABER ENGINEERING, PA No. C02383 CERTIFICATE OF AUTHORIZATION

SOUTH CAROLINA PROFESSIONAL ENGINEER No. 21 JAMES A. TRIBBLE May 01, 2018

FIRM NUMBER = C-2130

NEWBERRY COUNTY AIRPORT

NEW TERMINAL RENOVATION & EXPANSION

ARCHITECT

THE WILSON GROUP
P O BOX 5510
CHARLOTTE, NC 28299
(704) 331-9747

PROJECT MANAGER | CIVIL ENGINEER

TALBERT, BRIGHT & ELLINGTON
2000 PARK STREET, SUITE 101
COLUMBIA, SC 29201
(803) 933-9290

STRUCTURAL ENGINEER

STEWART
101 N. TRYON ST., SUITE 1400
CHARLOTTE, NC 28202
(704) 909-3523

MECHANICAL, ELECTRICAL, & PLUMBING ENGINEER

SABER ENGINEERING
2923 S. TRYON ST., SUITE 280
CHARLOTTE, NC 28203
(704) 373-0068

REVISIONS

DATE MAY 1, 2018
PROJECT NUMBER 9198-000

SHEET TITLE
PLUMBING PLANS AND RISERS

SHEET NUMBER
P2

HVAC GENERAL NOTES

1. THE CONTRACTOR SHALL FURNISH AND INSTALL ALL MATERIAL AND EQUIPMENT IN STRICT ACCORDANCE WITH APPLICABLE CODES AND STANDARDS, AND PER MANUFACTURER'S DIRECTIONS.
2. THE CONTRACTOR SHALL SECURE AND PAY FOR ALL NECESSARY PERMITS, LICENSE, INSPECTIONS, APPROVALS, AND FEES.
3. THE CONTRACTOR SHALL COORDINATE HIS WORK WITH ALL OTHER TRADES BEFORE INSTALLATION OF ANY MATERIALS OR EQUIPMENT.
4. THESE DRAWINGS ARE DIAGRAMMATIC AND SHOW GENERAL LOCATION AND ARRANGEMENT OF ALL MATERIALS AND EQUIPMENT. THE DRAWINGS SHALL BE FOLLOWED AS CLOSELY AS BUILDING CONSTRUCTION AND ALL OTHER WORK WILL PERMIT.
5. DO NOT SCALE DRAWINGS FOR MEASUREMENTS.
6. ALL DUCT DIMENSIONS SHOWN ARE INTERIOR DUCT DIMENSIONS.
7. ALL PENETRATIONS THROUGH EXTERIOR WALLS & ROOF SHALL BE FLASHED & COUNTERFLASHED IN A WATERPROOF MANNER. (COLOR TO MATCH EXTERIOR).
8. SEAL ALL PENETRATIONS OF RATED WALLS WITH FIRE DAMPER, SEALANT MATERIAL APPROVED BY LOCAL CODE.
9. ALL SUSPENDED MATERIALS AND EQUIPMENT SHALL BE INDIVIDUALLY SUPPORTED FROM THE BUILDING STRUCTURE. DO NOT SUSPEND ITEMS FROM THE CEILING OR ITS SUPPORT SYSTEM.
10. INSTALL ALL CONTROL DEVICES, INCLUDING THERMOSTATS AND SWITCHES, 4'-0" ABOVE FINISHED FLOOR. PROVIDE THE REQUIRED DEVICE(S) FOR ALL SYSTEMS WHETHER LOCATED ON THE PLANS OR NOT.
11. LOCATE CEILING DIFFUSERS IN ACCORDANCE WITH ARCHITECTURAL REFLECTED CEILING PLANS (IF PROVIDED).
12. PROVIDE MANUFACTURER'S RECOMMENDED CLEARANCES AROUND MECHANICAL UNITS FOR MAINTENANCE AND FILTER REMOVAL.
13. ALL PIPING AND DUCTWORK LOCATIONS SHALL BE COORDINATED W/ WORK UNDER OTHER DIVISIONS OF THE SPECIFICATIONS, TO AVOID INTERFERENCE.
14. ALL SUPPLY AND RETURN DUCT SHALL BE INSULATED. CONCEALED SHEET METAL DUCT MAY BE EXTERNALLY INSULATED WITH MINERAL FIBER BOARD OR BLANKET OR MAY BE INTERNALLY INSULATED WITH DUCT LINER (R-VALUE = 5). THE FIRST 15' FROM THE AIR HANDLER SHALL BE INTERNALLY LINED. INTERNALLY LINED INSULATION SHALL MEET BACTERIOLOGICAL STANDARD ASTM C 665.
15. CERTIFIED TEST AND BALANCE CONTRACTOR SHALL BALANCE SYSTEM TO AIR QUANTITIES INDICATED ON PLANS AND PROVIDE OWNER'S REPRESENTATIVE WITH COMPLETE BALANCE REPORT. IF BALANCING DAMPERS ARE NOT PROVIDED IN RETURN DUCTWORK, CONTRACTOR SHALL BALANCE SUPPLY SIDE TO AIR QUANTITIES INDICATED ON PLANS AND SHALL BALANCE OUTSIDE AIR AND RETURN AIR FLOWS AT THE AIR HANDLER TO AIR QUANTITIES INDICATED IN THE SCHEDULE. PROVIDE NEW AIR FILTERS FOR EACH UNIT.
16. AS REQUIRED BY LOCAL CODES, MECHANICAL CONTRACTOR SHALL PROVIDE U.L. LISTED FIRE DAMPERS WHERE REQUIRED FOR FIRE PROTECTION REQUIREMENTS OF THE HVAC SYSTEM & THE UL ASSEMBLY.
17. PROVIDE 1 YEAR WARRANTY ON ALL EQUIPMENT AND 5 YEAR WARRANTY ON ALL COMPRESSORS.
18. ALL INTAKE OPENINGS SHALL BE LOCATED A MINIMUM OF 10'-0" FROM ALL EXHAUST LOCATIONS.
19. ALL ACTUACTORS ON MOTORIZED DAMPERS, SMOKE DAMPERS, AND FIRE-SMOKE DAMPERS ARE TO BE LOW VOLTAGE UNLESS OTHERWISE NOTED.
20. REFER TO APPENDIX B FOR SITE SEISMIC CLASSIFICATION. A COMPLETE SYSTEM OF SEISMIC RESTRAINTS SHALL BE DESIGNED BY MASON INDUSTRIES (OR EQUAL) & SEALED BY THEIR REGISTERED ENGR & INSTALLED BY THIS CONTR. AS REQ'D BY APPLICABLE CODES FOR THE LOCALE OF THIS PROJECT. SEISMIC RESTRAINTS FOR SEISMIC CLASSES D, E, AND F SHALL BE SUBMITTED TO THE DESIGN PROFESSIONAL FOR REVIEW PRIOR TO INSTALLATION.
21. CONDENSATE DRAIN PIPING SHALL BE SCHEDULE 40 PVC PIPE AND FITTINGS. DRAINS FROM AIR HANDLING UNITS SHALL BE TRAPPED.
22. ALL MAIN DUCTWORK SHALL BE GALVANIZED SHEET METAL CONSTRUCTED IN ACCORDANCE WITH SMACNA STANDARDS. RUNOUTS FROM MAIN/BRANCH DUCTS MAY BE FLEXIBLE DUCT CONFORMING TO THE REQUIREMENTS OF UL 181 FOR CLASS 1 FLEXIBLE AIR DUCTS. MAX. LENGTH OF FLEX PER RUNOUT TO BE 10'-0". A MAXIMUM OF 5'-0" OF FLEX MAY BE USED FROM THE MAIN DUCT TO THE FP/VAV BOX INLET FOR ALIGNMENT PURPOSES ONLY.
23. THE MECHANICAL CONTRACTOR SHALL PROVIDE REFRIGERANT AND LOW VOLTAGE CONTROL LINES FROM THE CONDENSER TO THE AIR HANDLING UNIT. COORDINATE ROUTING AND INSTALLATION WITH THE GENERAL CONTRACTOR. SIZE REFRIGERANT LINES PER MANUFACTURER'S REQUIREMENTS.
24. ELECTRICAL CONTRACTOR TO PROVIDE ALL HIGH VOLTAGE ELECTRICAL WIRING, CONDUIT, DISCONNECT SWITCHES, FUSES, ECT. TO SPLIT SYSTEM UNITS. ALL FINAL ELECTRICAL CONNECTIONS ARE BY ELECTRICAL CONTRACTOR.
25. OUTSIDE AIR DUCTWORK SHALL BE WRAPPED WITH 1½" FIBERGLASS DUCT WRAP WITH VAPOR BARRIER.
26. REFRIGERANT PIPING, NOT SHOWN ON PLANS, SHALL BE SIZED & INSTALLED IN ACCORDANCE WITH THE MANUFACTURER'S RECOMMENDATIONS, INSTALLATION INSTRUCTIONS AND LOCAL CODES.
27. MECHANICAL CONTRACTOR SHALL VERIFY LOCATION OF ALL PENETRATIONS FOR RELIEF HOODS, OUTSIDE AIR HOODS, LOUVERS, AND WALL CAPS WITH ARCHITECT & OWNER PRIOR TO INSTALLATION.
28. MECHANICAL CONTRACTOR SHALL PAINT ALL RELIEF HOODS, INTAKE HOODS, LOUVERS, AND VENT CAPS. CONFIRM COLOR WITH ARCHITECT & OWNER PRIOR TO INSTALLATION.
29. SEE PLUMBING SHEETS FOR ALL GAS PIPING INFORMATION AND DETAILS.
30. ALL SUPPLY, RETURN, AND OUTSIDE AIR DUCTWORK IN ATTIC TO BE INSULATED WITH A MINIMUM OF R-8 PER IBC/NC 2009 SECTION 803.2.8
31. PENETRATIONS OF RATED WALLS, PARTITIONS AND FLOORS OF NON- COMBUSTIBLE CONSTRUCTION SHALL BE FIRESTOPPED WITH NONCOMBUSTIBLE MATERIALS. PENETRATIONS OF NONRATED WALLS, PARTITIONS AND FLOOR OF COMBUSTIBLE CONSTRUCTION SHALL BE FIRESTOPPED WITH MATERIALS EQUIVALENT TO TWO INCHES OF WOOD. FIRESTOPPING SHALL COMPLY WITH ASTM E-814.
34. MC SHALL PREPARE ALL EXPOSED DUCT, GRILLES, PIPING, AND UNITS FOR PAINTING. GC WILL BE RESPONSIBLE FOR PAINTING.
36. ALL CUTTING AND PATCHING OF WALLS AND FLOORS FOR MECHANICAL EQUIPMENT SHALL BE THE RESPONSIBILITY OF THE MECHANICAL CONTRACTOR.
37. THE MECHANICAL CONTRACTOR SHALL COORDINATE THE REQUIRED OPENINGS IN ROOF TRUSSES WITH THE G.C. IN ORDER TO PROVIDE ADEQUATE SPACE, ACCESS AND SUPPORT FOR THE MECHANICAL UNIT.
38. THE GENERAL CONTRACTOR SHALL PROVIDE PLATFORMS AS REQUIRED FOR THE INSTALLATION OF THE MECHANICAL UNIT, AND SUITABLE WALKING SURFACES AND WORKING AREAS FOR ACCESS AND MAINTENANCE. THE MECHANICAL CONTRACTOR SHALL COORDINATE THE REQUIREMENTS FOR THESE ITEMS WITH THE GENERAL CONTRACTOR.

MECHANICAL LEGEND

XxX RECTANGULAR DUCT	SIDEWALL DIFFUSER/GRILLE
X"ϕ ROUND METAL DUCT	C CONDENSATE DRAIN
X"ϕ FLEX/RIGID ROUND DUCT	R REFRIGERANT PIPING
ELBOW WITH TURNING VANES	XX-N MECHANICAL EQUIPMENT TYPE XX
VOLUME DAMPER	T T-STAT MOUNTED 46"AFF.
SUPPLY TAP W/ NO VOLUME DAMPER	SD DUCT SMOKE DETECTOR
SUPPLY DIFFUSER/GRILLE	LOUVERED DOOR (SEE ARCHITECTURAL DRAWINGS)
RETURN REGISTER/GRILLE	3/4" DOOR UNDER CUT
EXHAUST REGISTER/GRILLE	FD U.L. FIRE DAMPER W/ ACCESS DOOR
CEILING EXHAUST FAN	RD U.L. .CEILING RADIATION DAMPER
	FSD U.L. FIRE-SMOKE DAMPER W/ ACCESS DOOR

DIFFUSER SCHEDULE

SYMBOL	CFM	NECK SIZE	MODULE SIZE	FRAME TYPE	PATTERN	DAMPER	MATERIAL	SERVICE	FINISH	MANUFACTURER & MODEL NO.	NOTES
A	AS NOTED	AS NOTED	AS NOTED	LAY-IN	4-WAY	YES	STEEL	SUPPLY	NOTE 2	PRICE SMD	1
B	AS NOTED	AS NOTED	AS NOTED	LAY-IN	-	YES	STEEL	RETURN	NOTE 2	PRICE PDDR	1
C	AS NOTED	AS NOTED	12x12	SURFACE	4-WAY	YES	STEEL	SUPPLY	NOTE 2	PRICE SMD	1
D	AS NOTED	AS NOTED	AS NOTED	SURFACE	LINEAR	YES	STEEL	SUPPLY	NOTE 2	PRICE LBP	1
E	AS NOTED	AS NOTED	AS NOTED	SIDEWALL	-	YES	STEEL	RETURN	NOTE 2	PRICE 530	1

NOTES:

1. DIFFUSER DESIGNATIONS ON PLANS AS FOLLOWED:

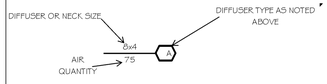

2. FINISH TO MATCH/ BE ABLE MATCH CEILING OR WALL OR DOOR
3. PROVIDE WITH U.L. LISTED RADIATION DAMPER.

SPLIT SYSTEM HEAT PUMP UNIT SCHEDULE

AIR HANDLING UNIT DATA												HEAT PUMP									
			FAN DATA				COOLING		HEAT	AUX.	ELECTRICAL DATA		GENERAL DATA				ELECTRICAL DATA				
UNIT TAG	AREA SERVED	MANUF. MODEL	FAN CFM	ESP (WG)	MOTOR HP	OA (CFM)	TOTAL (MBH)	SENS. (MBH)	TOTAL (MBH)	HEAT (KW)	VOLTAGE (V/P/H)	MCA (A)	MOCP (A)	UNIT TAG	MANUF. MODEL	TONNAGE	EFF. (SEER)	HSPF	VOLTAGE (V/P/H)	MCA (A)	MOCP (A)	WEIGHT (LBS) AH/HP	NOTES
AH-1	SEE PLANS	CARRIER FB4CNP030L	1000	0.4"	1/3	150	28.6	21.97	25.1	8.0	240/1	48.5	50	HP-2	CARRIER 25HCE430	2.5	14	8.2	240/1	21.1	30	122/170	1-16

NOTES:

1. COOLING CAPACITIES ARE RATED IN ACCORDANCE WITH ARI STANDARD 210/290 AT 95 DEGREE FARHENHEIT AMBIENT OUTDOOR AIR TEMPERATURE, 80 DEGREE FARHENHEIT DRY BULB, AND 67 DEGREE FARHENHEIT WET BULB ENTERING AIR TEMPERATURE, AND NORMAL AIR QUANTITY LISTED.
2. REFRIGERANT PIPING TO BE SIZED PER TOTAL INSTALLATION EQUIVALENT LENGTH. LONG-LINE APPLICATION TO BE PROVIDED WHENEVER MANUFACTURER RECOMMENDED LENGTHS ARE EXCEEDED, INCLUDING LIQUID LINE SOLENOID VALVES, ACCUMULATOR, ETC. MAXIMUM T.E.L. IS 100'.
3. PROVIDE SINGLE POINT ELECTRICAL CONNECTION FOR AIR HANDLING UNIT.
4. PROVIDE NEW FILTER IN EACH UNIT AT TURNOVER TO OWNER.
5. OUTDOOR UNITS SHALL HAVE A MINIMUM 14.0 SEER RATING.
6. PROVIDE MANUFACTURER'S 7-DAY PROGRAMMABLE AUTOMATIC CHANGEOVER HEAT/ COOL THERMOSTAT. PROVIDE WITH OUTSIDE AIR TEMPERATURE SENSOR TO LOCKOUT ELECTRIC HEAT WHEN OUTSIDE AIR TEMPERATURE IS ABOVE 40 DEGREES.
7. PROVIDE HEAT PUMP KITWITH AIR HANDLER (IF REQUIRED).
8. PROVIDE A 24V MOTORIZED DAMPER ON FRESH AIR RUN-OUT TO UNIT. DAMPER IS TO OPEN WHEN FAN IS ENERGIZED.
9. ALL ACCESSORIES AND OPTIONS ARE TO BE FACTORY INSTALLED.
10. RETURN AIR THROUGH FILTERED GRILLE.
11. SUPPORT AHU ON REINFORCED SHEET METAL R.A. PLENUM.
12. AHU TO USE HORIZONTAL APPLICATION.
13. DRAIN CONDENSATE TO TAILPIECE OF NEAREST SINK.
14. OUTSIDE AIR PROVIDED BY NATURAL VENTILATION AND INFILTRATION.
15. PROVIDE 2 ZONE KIT WITH THERMOSTATS FOR ZONE CONTROL.
16. CATALOG NUMBERS AND MANUFACTURERS ARE TO INDICATE TYPE AND QUALITY OF UNIT DESIRED. SUBMIT CUTSHEETS OF THESE AND ALTERNATE MANUFACTURERS FOR ARCHITECT AND OWNER APPROVAL PRIOR TO PURCHASE OF ANY UNITS. INFORMATION ON ALTERNATE UNITS PROPOSED BY THE CONTRACTOR SHALL INCLUDE THE ADD/ DEDUCT ASSOCIATED WITH ACCEPTANCE OF THAT UNIT (OR THE ALTERNATE PACKAGE AS A WHOLE).

VENTILATION CALCULATIONS

BASED ON 2012 NCMC TABLE 403.3

	Floor Area	Area Outdoor Air Rate cfm/sqft	People Outdoor Air Rate cfm/person	Occupant Density #/1000 S.F	Occupancy	Outdoor Air Required	Ventilation Effectiveness (Ez)	Total Outdoor Air Required
AH-1								
Lobby	108.2	0.06	7.5	30	3	31	0.8	39
Lounge	248.0	0.06	7.5	30	7	71	0.8	88
Quiet	71.7	0.06	5	5	0	6	0.8	8
Planning	79.1	0.06	5	5	0	7	0.8	8
						AH-1 TOTAL OUTSIDE AIR REQUIRED		143
						AH-1 TOTAL OUTSIDE AIR PROVIDED		150

FAN SCHEDULE

UNIT NO.	SERVICE	AREA SERVED	CFM	S.P.	RPM	TYPE & ARRANGEMENT	MIN. MOTOR HP & VOLTAGE	MANUFACTURER & MODEL NO.	DRIVE	CONTROL SCHEME	NOTES
EF-1	EXHAUST	RESTROOM	150 MIN	0.25"	1400	CEILING	113 W/1.3A 120/1PH	GREENHECK SP-A190	DIRECT	A	1-5
EF-2	EXHAUST	JANITOR	150 MIN	0.25"	1400	CEILING	113 W/1.3A 120/1PH	GREENHECK SP-A190	DIRECT	A	1-5
EF-3	EXHAUST	KITCHEN	125 MIN	0.25"	1400	CEILING	113 W/1.3A 120/1PH	GREENHECK SP-A190	DIRECT	A	1-5

NOTES:
1. SCREEN
2. BACKDRAFT DAMPER
3. COLOR BY ARCHITECT
4. INTEGRAL DISCONNECT SWITCH
5. SPEED CONTROLLER NEAR FAN

CONTROL OPTIONS:
A. CONTROL W/ ROOM LIGHTS

SABER ENGINEERING
2923 South Tryon Street Suite 280
Charlotte, North Carolina 28203
tel 704.373.0068
MECHANICAL ELECTRICAL PLUMBING

SOUTH CAROLINA SABER ENGINEERING, PA No. C02383 CERTIFICATE OF AUTHORIZATION

SOUTH CAROLINA PROFESSIONAL ENGINEER No. 21196 JAMES A. TRIBBLE May 01, 2018

FIRM NUMBER = C-2130

NEWBERRY COUNTY AIRPORT

NEW TERMINAL RENOVATION & EXPANSION

ARCHITECT
THE WILSON GROUP
P O BOX 5510
CHARLOTTE, NC 28299
(704) 331-9747

PROJECT MANAGER | CIVIL ENGINEER
TALBERT, BRIGHT & ELLINGTON
2000 PARK STREET, SUITE 101
COLUMBIA, SC 29201
(803) 933-9290

STRUCTURAL ENGINEER
STEWART
101 N. TRYON ST., SUITE 1400
CHARLOTTE, NC 28202
(704) 909-3523

MECHANICAL, ELECTRICAL, & PLUMBING ENGINEER
SABER ENGINEERING
2923 S. TRYON ST., SUITE 280
CHARLOTTE, NC 28203
(704) 373-0068

REVISIONS

DATE MAY 1, 2018
PROJECT NUMBER 9198-000

SHEET TITLE
MECHANICAL LEGENDS, NOTES AND SCHEDULES

SHEET NUMBER
M1

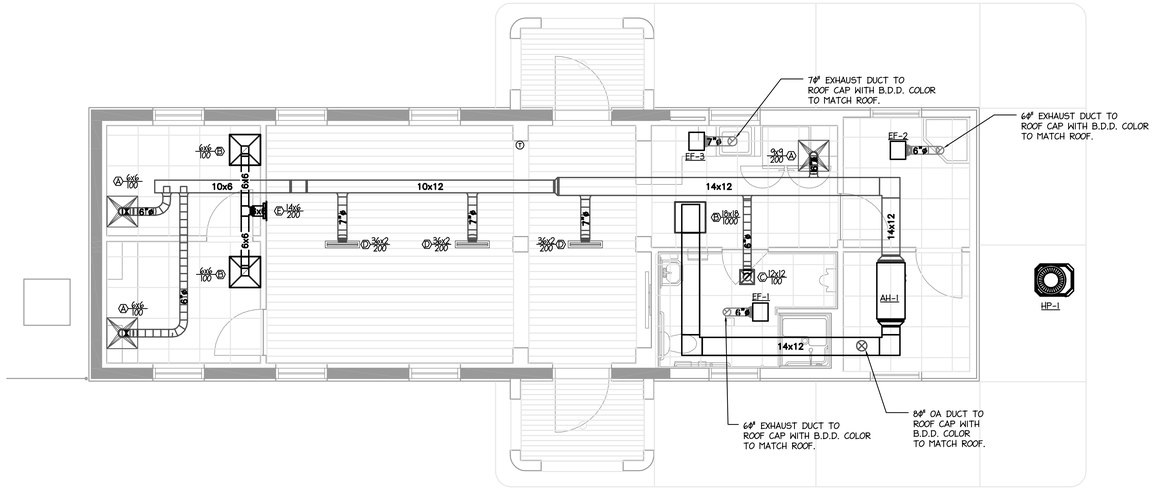

1 **MECHANICAL FLOOR PLAN**
1/4"=1'-0"

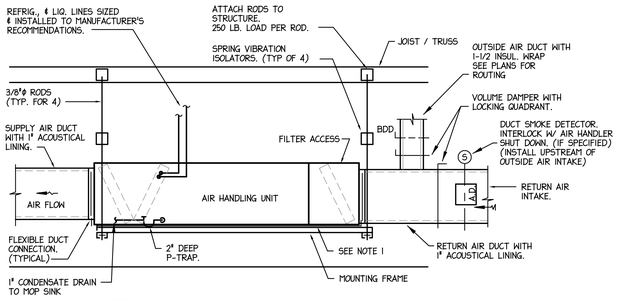

NOTES:

1. AUXILIARY DRAIN PAN WITH MICROFLOAT SWITCH. INTERLOCK FLOAT SWITCH WITH FURNACE. INSTALL FLOAT SWITCH IN ONE CORNER OF PAN AND TILT PAN TO THAT CORNER.

2 **AIR HANDLING UNIT DETAIL**
NO SCALE

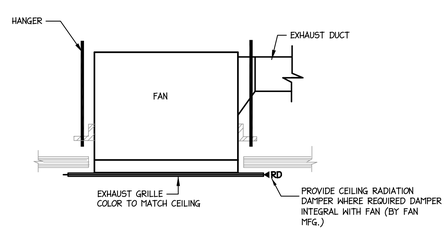

3 **EXHAUST FAN DETAIL**
NO SCALE

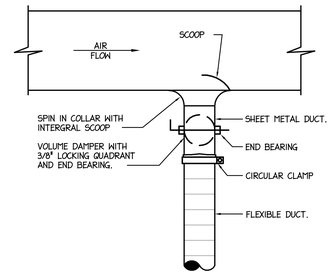

NOTES:

1. SEE FLOOR PLANS AND SPECIFICATIONS FOR DUCT INSULATION REQUIREMENTS.
2. TAP OFF TOP/SIDE/BOTTOM OF DUCT AS REQUIRED

4 **BRANCH TAKEOFF TO SINGLE OUTLET**
NO SCALE

SABER ENGINEERING
2923 South Tryon Street Suite 280
Charlotte, North Carolina 28203
tel 704.373.0068
MECHANICAL ELECTRICAL PLUMBING

SOUTH CAROLINA PROFESSIONAL ENGINEER SABER ENGINEERING, PA No. C02383 CERTIFICATE OF AUTHORIZATION

SOUTH CAROLINA PROFESSIONAL ENGINEER No. 21 JAMES A. TRIBBLE

May 01, 2018

FIRM NUMBER = C-2130

NEWBERRY COUNTY AIRPORT

NEW TERMINAL RENOVATION & EXPANSION

ARCHITECT

THE WILSON GROUP
P O BOX 5510
CHARLOTTE, NC 28299
(704) 331-9747

PROJECT MANAGER | CIVIL ENGINEER

TALBERT, BRIGHT & ELLINGTON
2000 PARK STREET, SUITE 101
COLUMBIA, SC 29201
(803) 933-9290

STRUCTURAL ENGINEER

STEWART
101 N. TRYON ST., SUITE 1400
CHARLOTTE, NC 28202
(704) 909-3523

MECHANICAL, ELECTRICAL, & PLUMBING ENGINEER

SABER ENGINEERING
2923 S. TRYON ST., SUITE 280
CHARLOTTE, NC 28203
(704) 373-0068

REVISIONS

DATE	MAY 1, 2018
PROJECT NUMBER	9198-000

SHEET TITLE

MECHANICAL PLAN

SHEET NUMBER

M2

COM*check* Software Version 4.0.8.1

Mechanical Compliance Certificate

Project Information

Energy Code: 90.1 (2010) Standard
Project Title:
Location: Newberry, South Carolina
Climate Zone: 3a
Project Type: New Construction

Construction Site: Owner/Agent: Designer/Contractor:

Mechanical Systems List

Quantity System Type & Description

1 AH-1 (Single Zone):
Split System Heat Pump
Heating Mode: Capacity = 25 kBtu/h,
Proposed Efficiency = 8.20 HSPF, Required Efficiency = 7.70 HSPF
Cooling Mode: Capacity = 29 kBtu/h,
Proposed Efficiency = 14.00 SEER, Required Efficiency: 13.00 SEER
Fan System: None

Mechanical Compliance Statement

Compliance Statement: The proposed mechanical design represented in this document is consistent with the building plans, specifications, and other calculations submitted with this permit application. The proposed mechanical systems have been designed to meet the 90.1 (2010) Standard requirements in COM*check* Version 4.0.8.1 and to comply with any applicable mandatory requirements listed in the Inspection Checklist.

H. WAYNE KING III — Name - Title
H. Wayne King III — Signature
3/15/2018 — Date

COM*check* Software Version 4.0.8.1

Inspection Checklist

Energy Code: 90.1 (2010) Standard

Requirements: 0.0% were addressed directly in the COM*check* software

Text in the "Comments/Assumptions" column is provided by the user in the COMcheck Requirements screen. For each requirement, the user certifies that a code requirement will be met and how that is documented, or that an exception is being claimed. Where compliance is itemized in a separate table, a reference to that table is provided.

Section # & Req.ID	Plan Review	Complies?	Comments/Assumptions
4.2.2.6.4. 4.2.1.6.7. 2 [PR2][1]	Plans, specifications, and/or calculations provide all information with which compliance can be determined for the mechanical systems and equipment and document where exceptions to the standard are claimed. Load calculations per acceptable engineering standards and handbooks.	☐Complies ☐Does Not ☐Not Observable ☐Not Applicable	
4.2.2.8.4. 1.1.8.4.1. 2.8.7 [PR6][2]	Plans, specifications, and/or calculations provide all information with which compliance can be determined for the electrical systems and equipment and document where exceptions are claimed. Feeder connectors sized in accordance with approved plans and branch circuits sized for maximum drop of 3%.	☐Complies ☐Does Not ☐Not Observable ☐Not Applicable	
6.7.2.4 [PR5][3]	Detailed instructions for HVAC systems commissioning included on the plans or specifications for projects >=50,000 ft2.	☐Complies ☐Does Not ☐Not Observable ☐Not Applicable	

Additional Comments/Assumptions:

1 High Impact (Tier 1) 2 Medium Impact (Tier 2) 3 Low Impact (Tier 3)

Section # & Req.ID	Footing / Foundation Inspection	Complies?	Comments/Assumptions
6.4.3.8 [FO9][3]	Freeze protection and snow/ice melting system sensors for future connection to controls.	☐Complies ☐Does Not ☐Not Observable ☐Not Applicable	

Additional Comments/Assumptions:

1 High Impact (Tier 1) 2 Medium Impact (Tier 2) 3 Low Impact (Tier 3)

Section # & Req.ID	Mechanical Rough-In Inspection	Plans Verified Value	Field Verified Value	Complies?	Comments/Assumptions
6.4.1.4.6. 4.1.5 [ME1][2]	HVAC equipment efficiency verified. Non-NAECA HVAC equipment labeled as meeting 90.1.	Efficiency:____	Efficiency:____	☐Complies ☐Does Not ☐Not Observable ☐Not Applicable	*See the Mechanical Systems list for values.*
6.4.3.4.1 [ME3][3]	Stair and elevator shaft vents have motorized dampers that automatically close.			☐Complies ☐Does Not ☐Not Observable ☐Not Applicable	
6.4.3.4.5 [ME39][3]	Enclosed parking garage ventilation has automatic contaminant detection and capacity to stage or modulate fans to 50% or less of design capacity.			☐Complies ☐Does Not ☐Not Observable ☐Not Applicable	
6.4.3.4.4 [ME5][3]	Ventilation fans >0.75 hp have automatic controls to shut off fan when not required.			☐Complies ☐Does Not ☐Not Observable ☐Not Applicable	
6.4.3.9 [ME6][1]	Demand control ventilation provided for spaces >500 ft2 and >40 people/1000 ft2 occupant density and served by systems with air side economizer, auto modulating outside air damper control, or design airflow >3,000 cfm.			☐Complies ☐Does Not ☐Not Observable ☐Not Applicable	
6.4.3.10 [ME40][2]	Single zone HVAC systems with fan motors >=5 hp have variable airflow controls. Air conditioning equipment with a cooling capacity >=110,000 Btu/h has variable airflow controls.			☐Complies ☐Does Not ☐Not Observable ☐Not Applicable	*See the Mechanical Systems list for values.*
6.4.4.1.1 [ME7][3]	Insulation exposed to weather protected from damage. Insulation outside of the conditioned space and associated with cooling systems is vapor retardant.			☐Complies ☐Does Not ☐Not Observable ☐Not Applicable	
6.4.4.1.2 [ME8][2]	HVAC ducts and plenums insulated. Where ducts or plenums are installed in or under a slab, verification may need to occur during Foundation Inspection.	R-____	R-____	☐Complies ☐Does Not ☐Not Observable ☐Not Applicable	
6.4.4.1.3 [ME9][2]	HVAC piping insulation thickness. Where piping is installed in or under a slab, verification may need to occur during Foundation Inspection.	____ in.	____ in.	☐Complies ☐Does Not ☐Not Observable ☐Not Applicable	
6.4.4.1.4 [ME41][3]	Thermally ineffective panel surfaces of sensible heating panels have insulation >= R-3.5.			☐Complies ☐Does Not ☐Not Observable ☐Not Applicable	
6.4.4.2.1 [ME10][2]	Ducts and plenums sealed based on static pressure and location.			☐Complies ☐Does Not ☐Not Observable ☐Not Applicable	

1 High Impact (Tier 1) 2 Medium Impact (Tier 2) 3 Low Impact (Tier 3)

Section # & Req.ID	Mechanical Rough-In Inspection	Plans Verified Value	Field Verified Value	Complies?	Comments/Assumptions
6.4.4.2.2 [ME11][3]	Ductwork operating >3 in. water column requires air leakage testing.			☐Complies ☐Does Not ☐Not Observable ☐Not Applicable	
6.5.2.3 [ME19][3]	Dehumidification controls provided to prevent reheating, recooling, mixing of hot and cold airstreams or concurrent heating and cooling of the same airstream.			☐Complies ☐Does Not ☐Not Observable ☐Not Applicable	
6.5.3.3 [ME42][3]	Multiple zone VAV systems with DDC of individual zone boxes have static pressure setpoint reset controls.			☐Complies ☐Does Not ☐Not Observable ☐Not Applicable	*See the Mechanical Systems list for values.*
6.5.4.1 [ME25][3]	HVAC pumping systems >10 hp designed for variable fluid flow.			☐Complies ☐Does Not ☐Not Observable ☐Not Applicable	
6.5.6.1 [ME56][1]	Exhaust air energy recovery on systems meeting Table 6.5.6.1.			☐Complies ☐Does Not ☐Not Observable ☐Not Applicable	
6.5.7.1.1 [ME32][2]	Kitchen hoods >5,000 cfm have make up air >=50% of exhaust air volume.			☐Complies ☐Does Not ☐Not Observable ☐Not Applicable	
6.5.7.1.5 [ME49][3]	Approved field test used to evaluate design air flow rates and demonstrate proper capture and containment of kitchen exhaust systems.			☐Complies ☐Does Not ☐Not Observable ☐Not Applicable	
6.5.7.2 [ME33][3]	Fume hoods exhaust systems >=15,000 cfm have VAV hood exhaust and supply systems, direct make-up air or heat recovery.			☐Complies ☐Does Not ☐Not Observable ☐Not Applicable	
6.5.8.1 [ME34][2]	Unenclosed spaces that are heated use only radiant heat.			☐Complies ☐Does Not ☐Not Observable ☐Not Applicable	

Additional Comments/Assumptions:

1 High Impact (Tier 1) 2 Medium Impact (Tier 2) 3 Low Impact (Tier 3)

Section # & Req.ID	Rough-In Electrical Inspection	Complies?	Comments/Assumptions
8.4.2 [EL10][2]	At least 50% of all 125 volt 15- and 20-Amp receptacles are controlled by an automatic control device.	☐Complies ☐Does Not ☐Not Observable ☐Not Applicable	
10.4.1 [EL9][2]	Electric motors meet requirements where applicable.	☐Complies ☐Does Not ☐Not Observable ☐Not Applicable	

Additional Comments/Assumptions:

1 High Impact (Tier 1) 2 Medium Impact (Tier 2) 3 Low Impact (Tier 3)

Section # & Req.ID	Final Inspection	Complies?	Comments/Assumptions
6.4.3.1.2 [FI3][3]	Thermostatic controls have a 5 °F deadband.	☐Complies ☐Does Not ☐Not Observable ☐Not Applicable	
6.4.3.2 [FI20][3]	Temperature controls have setpoint overlap restrictions.	☐Complies ☐Does Not ☐Not Observable ☐Not Applicable	
6.4.3.3.1 [FI21][3]	HVAC systems equipped with at least one automatic shutdown control.	☐Complies ☐Does Not ☐Not Observable ☐Not Applicable	
6.4.3.3.2 [FI22][3]	Setback controls allow automatic restart and temporary operation as required for maintenance.	☐Complies ☐Does Not ☐Not Observable ☐Not Applicable	
6.4.3.5 [FI5][3]	Heat pump controls prevent supplemental electric resistance heat from coming on when not needed.	☐Complies ☐Does Not ☐Not Observable ☐Not Applicable	
6.4.3.7 [FI6][3]	When humidification and dehumidification are provided to a zone, simultaneous operation is prohibited.	☐Complies ☐Does Not ☐Not Observable ☐Not Applicable	
6.7.2.1 [FI7][3]	Furnished HVAC as-built drawings submitted within 90 days of system acceptance.	☐Complies ☐Does Not ☐Not Observable ☐Not Applicable	
6.7.2.2 [FI8][3]	Furnished O&M manuals for HVAC systems within 90 days of system acceptance.	☐Complies ☐Does Not ☐Not Observable ☐Not Applicable	
6.7.2.3 [FI9][1]	An air and/or hydronic system balancing report is provided for HVAC systems serving zones >5,000 ft2 of conditioned area.	☐Complies ☐Does Not ☐Not Observable ☐Not Applicable	
6.7.2.4 [FI10][1]	HVAC control systems have been tested to ensure proper operation, calibration and adjustment of controls.	☐Complies ☐Does Not ☐Not Observable ☐Not Applicable	
10.4.3 [FI24][2]	Elevators are designed with the proper lighting, ventilation power, and standby mode.	☐Complies ☐Does Not ☐Not Observable ☐Not Applicable	

Additional Comments/Assumptions:

1 High Impact (Tier 1) 2 Medium Impact (Tier 2) 3 Low Impact (Tier 3)

SABER ENGINEERING
2923 South Tryon Street Suite 280
Charlotte, North Carolina 28203
tel 704.373.0068
MECHANICAL ELECTRICAL PLUMBING

SOUTH CAROLINA SABER ENGINEERING, PA CERTIFICATE OF AUTHORIZATION No. C02383

SOUTH CAROLINA PROFESSIONAL ENGINEER No. 21164 JAMES A. TRIBBLE May 01, 2018

FIRM NUMBER = C-2130

NEWBERRY COUNTY AIRPORT

NEW TERMINAL RENOVATION & EXPANSION

ARCHITECT

THE WILSON GROUP
P O BOX 5510
CHARLOTTE, NC 28299
(704) 331-9747

PROJECT MANAGER ICIVIL ENGINEER
TALBERT, BRIGHT & ELLINGTON
2000 PARK STREET, SUITE 101
COLUMBIA, SC 29201
(803) 933-9290

STRUCTURAL ENGINEER
STEWART
101 N. TRYON ST., SUITE 1400
CHARLOTTE, NC 28202
(704) 909-3523

MECHANICAL, ELECTRICAL, & PLUMBING ENGINEER
SABER ENGINEERING
2923 S. TRYON ST., SUITE 280
CHARLOTTE, NC 28203
(704) 373-0068

REVISIONS

DATE MAY 1, 2018

PROJECT NUMBER 9198-000

SHEET TITLE
MECHANICAL COMMCHECK

SHEET NUMBER
M3

LIGHTING FIXTURE SCHEDULE

MARK	MANUF.	CATALOG NUMBER	LAMP DATA NO.	LAMP DATA TYPE	VOLTS	BALLAST DATA NO.	BALLAST DATA TYPE	INPUT WATTS	MOUNTING	DESCRIPTION
A	RENOVA LTG SYSTEMS INC	RVN-22-N-L040-UNV-DIM-C30-AF	-	LED	120	1	ELECTRONIC DRIVER	35	RECESSED	RECESSED 2'x2' LED FIXTURE, 4000 LUMEN.
B	LITHONIA	LDN4-20-L04-AR-LSS-TRW	-	LED	120	1	ELECTRONIC DRIVER	26	RECESSED	4" RECESSED LED DOWN LIGHT.
C	TO BE SELECTED	-	-	LED	120	1	ELECTRONIC DRIVER	50	PENDANT	DECORATIVE LOBBY PENDANT. PROVIDE $500 ALLOWANCE.
D	BARN LIGHT ELECTRIC	G-WHB11-LED-980-G11-980-2000-27K	-	LED	120	1	ELECTRONIC DRIVER	20	WALL	LED GOOSENECK FIXTURE WITH 11" WAREHOUSE SHADE AND ARM BRACKET, BRUSHED ALUMINUM FINISH.
E	NOVA FLEX	NF-DS-0-160-24V-4100K	-	LED	120	1	ELECTRONIC DRIVER	5W/FT	SURFACE	PROVIDE 11' STRIP OF RIBBON LED TAPE LIGHT ALONG BOTTOM OF RECESS TOWER ELEMENT. PROVIDE ALL NECESSARY HARDWARE.
	MULE LTG	SQC-LED-1-R-W	2	LED	120	-	-	<1	UNIVERSAL	COMBO EMERGENCY/LED EXIT SIGN WITH RED LETTERS AND WHITE HOUSING. PROVIDE 90 MINUTE BATTERY BACKUP.
	MULE LTG	MAKO-LED-AC-BK	-	LED	120	-	-	<1	WALL	SURFACE MOUNTED EXTERIOR EMERGENCY LIGHT MOUNT AT 96" AFF. CONNECT TO UNSWITCHED LEG OF EXTERIOR LIGHTING CIRCUIT.
	MULE LTG	SQ LED W	2	LED	120	-	-	<1	UNIVERSAL	SURFACE MOUNTED EMERGENCY LIGHT. MOUNT AT 96" AFF TO BOTTOM. PROVIDE WITH 90 MINUTE BATTERY BACKUP.

NOTES:
1. CATALOG NUMBERS AND MANUFACTURERS ARE TO INDICATE TYPE AND QUALITY OF FIXTURE DESIRED. SUBMIT CUTSHEETS OF THESE AND ALTERNATE MANUFACTURERS FOR ARCHITECT AND OWNER APPROVAL PRIOR TO PURCHASE OF ANY FIXTURES. INFORMATION ON ALTERNATE FIXTURES PROPOSED BY THE CONTRACTOR SHALL INCLUDE THE ADD/DEDUCT ASSOCIATED WITH ACCEPTANCE OF THAT FIXTURE (OR THE ALTERNATE PACKAGE AS A WHOLE).
2. EXIT AND EMERGENCY LIGHTING FIXTURES SHALL BE CIRCUITED TO AN UNSWITCHED LEG OF THE LOCAL LIGHTING CIRCUIT, UNLESS NOTED OTHERWISE.

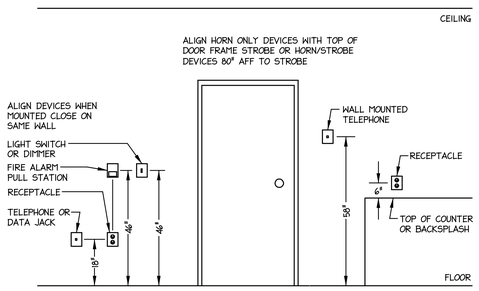

1 **TYPICAL DEVICE MOUNTING HEIGHTS**
1/2"=1'-0"

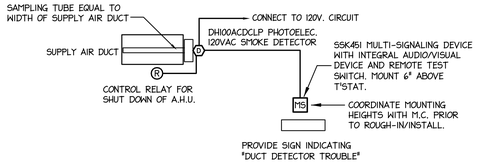

2 **DUCT DETECTOR MOUNTING DETAIL**
DIAGRAMMATIC ONLY

DUCT DECTECTOR & MULTI-SIGNALING ACCESSORY MODEL NUMBERS ARE FROM SYSTEM SENSOR.

ALL EQUIPMENT AND INSTALLATION SHALL COMPLY WITH THE LATEST LOCAL CODES.

SMOKE DETECTOR TO BE SUPPLIED BY EC TO MC FOR INSTALLATION INTO DUCTWORK. EC TO PROVIDE, WIRE AND TEST OPERATION OF DETECTOR AND NOTIFICATION DEVICES.

SEE MECHANICAL PLANS FOR LOCATION OF A/V DEVICES.

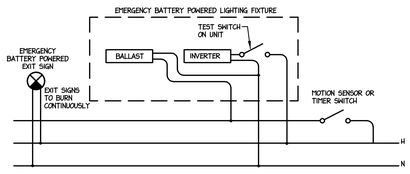

3 **EMERGENCY/NITE LIGHT WIRING DETAIL**
DIAGRAMMATIC

GENERAL ELECTRICAL NOTES

1. ALL ELECTRICAL WORK SHALL BE IN ACCORDANCE WITH THE LATEST EDITION OF THE NATIONAL ELECTRICAL CODE AND ALL LOCAL AND STATE CODES.
2. ALL MATERIAL, DEVICES, APPLIANCES, AND EQUIPMENT SHALL BE NEW AND SHALL CONFORM TO THE STANDARDS OF THE UNDERWRITER'S LABORATORIES, INC., AND THE NATIONAL ELECTRICAL MANUFACTURERS ASSOCIATION.
3. ALL ELECTRICAL PERMITS AND INSPECTION FEES SHALL BE OBTAINED AND PAID FOR BY THE ELECTRICAL CONTRACTOR. DRAWINGS ARE DIAGRAMMATIC ONLY AND INDICATE ONLY THE GENERAL ARRANGEMENT. SEE ARCHITECTURAL DRAWINGS FOR EXACT DIMENSIONS.
4. ELECTRICAL CONTRACTOR SHALL GUARANTEE ALL WORK AND MATERIALS FOR ONE YEAR EFFECTIVE THE DAY THE PROJECT IS ACCEPTED BY THE OWNER.
5. ELECTRICAL CONTRACTOR SHALL MAKE ALL ELECTRICAL POWER CONNECTIONS TO HVAC, PLUMBING AND OTHER EQUIPMENT AS REQUIRED.
6. A COMPLETE GROUNDING SYSTEM SHALL BE PROVIDED AND INSTALLED IN ACCORDANCE WITH ARTICLE 250 OF THE NEC, AND AS SHOWN ON THE DRAWINGS.
7. ALL CUTTING AND PATCHING OF WALLS AND FLOORS FOR ELECTRICAL EQUIPMENT SHALL BE THE RESPONSIBILITY OF THE ELECTRICAL CONTRACTOR.
8. CONDUCTORS SHALL BE COPPER RATED AT NOT LESS THAN 600 VOLTS. MINIMUM SIZE SHALL BE #12 AWG UNLESS OTHERWISE NOTED ON THE DRAWINGS. ALL WIRE #8 AWG AND LARGER SHALL BE STRANDED. ALL CONDUCTORS #10 AND SMALLER SHALL BE SOLID, UNLESS OTHERWISE NOTED. BRANCH CIRCUIT CONDUCTORS SHALL BE TYPE THHN OR THWN AS REQ'D.
9. ALL WIRING SHALL BE INSTALLED IN GALVANIZED RIGID CONDUIT, INTERMEDIATE METAL CONDUIT, OR EMT. EMT SHALL NOT BE USED IN OR UNDER CONCRETE SLABS, OR IN MASONRY WALLS. USE SCHEDULE 40 PVC OUTDOORS WHERE NOT SUBJECT TO PHYSICAL DAMAGE OR BELOW FLOOR SLAB. MINIMUM CONDUIT SIZE TO BE 1/2". TYPE MC AND AC CABLE MAY BE USED WHERE PERMISSIBLE BY NEC.
10. PROVIDE A PULLWIRE IN ALL EMPTY CONDUITS.
11. PROVIDE A TYPED DIRECTORY IN ALL PANELBOARDS CLEARLY DESCRIBING THE LOCATION OF AND TYPE OF LOAD BEING SERVED FOR ALL CIRCUITS. PROVIDE ENGRAVED PHENOLIC NAMEPLATES FOR ALL PANELBOARDS AND DISCONNECT SWITCHES, WHITE LETTERS ON BLACK BACKGROUND.
12. FUSES 0 - 600 AMPS SHALL BE UL CLASS "RK-1" LOW PEAK DUAL ELEMENT TIME DELAY WITH 200,000 AMPERE INTERRUPTING RATING AS MANUFACTURED BY BUSSMANN, UNLESS NOTED OTHERWISE.
13. ALL TERMINALS/LUGS SHALL BE 60/75° RATED. ALL TERMINALS, SPLICING CONNECTORS, LUGS, ETC SHALL BE IDENTIFIED FOR USE WITH THE MATERIAL (CU/AL) OF THE CONDUCTOR AND SHALL BE PROPERLY INSTALLED.
14. VERIFY ALL REQUIREMENTS AND COORDINATE EXACT LOCATION OF INCOMING ELECTRICAL SERVICE WITH LOCAL POWER COMPANY PRIOR TO PROJECT START-UP. NOTIFY ENGINEER OF ANY CHANGES AS MAY BE REQUIRED.
15. E.C. TO VERIFY DEVICE PLATE COLOR AND MATERIAL WITH ARCHITECT PRIOR TO PURCHASE.
16. THE ELECTRICAL CONTRACTOR SHALL BE RESPONSIBLE FOR PROTECTING ALL ELECTRICAL EQUIPMENT FROM FOREIGN MATERIAL DURING CONSTRUCTION (PAINT, SPACKLE, ETC.).
17. PENETRATIONS OF REQUIRED SMOKE PARTITIONS SHALL BE SEALED USING METHODS APPROVED UNDER THE STATE BUILDING CODE. COORDINATION WITH THE GENERAL CONTRACTOR SHALL BE MAINTAINED TO INSURE THAT THIS SMOKE STOPPING IS ACCOMPLISHED.
18. WHERE PENETRATIONS ARE MADE THROUGH A REQUIRED FIRE-RESISTIVE WALL, FLOOR, OR PARTITION FOR THE PURPOSE OF RUNNING RACEWAY CARRYING ELECTRICAL, TELEPHONE, TELEVISION, OR LOCAL COMMUNICATION AND/OR SIGNALING CIRCUITS, THE OPENING AROUND THE RACEWAY SHALL BE FIRE STOPPED PER THE STATE BUILDING CODE. COORDINATION WITH THE GENERAL CONTRACTOR SHALL BE MAINTAINED TO INSURE THAT THIS FIRE STOPPING IS ACCOMPLISHED. USE APPROVED U.L. OR EQUIVALENT ASSEMBLIES.
19. IN REQUIRED FIRE RATED WALLS AND PARTITIONS, OPENINGS FOR INSTALLATION OF BOXES THAT ARE GREATER THAN 16 SQUARE INCHES SHALL BE PROTECTED AS REQUIRED BY U.L. COORDINATE CLOSELY WITH THE GENERAL CONTRACTOR TO INSURE THAT THE INTEGRITY OF THE U.L. RATING IS MAINTAINED.
20. WHERE A HOME RUN IS SHOWN THE CIRCUIT SHALL BE INSTALLED IN A DEDICATED CONDUIT, DO NOT COMBINE WITH OTHER CIRCUITS. WHERE A CIRCUIT HOMERUN IS NOT SHOWN, THE CONTRACTOR SHALL COMBINE CIRCUITS AS FOLLOWS: A MAXIMUM OF THREE 20A BRANCH CIRCUITS MAY BE COMBINED IN A COMMON HOMERUN WITH SEPARATE NEUTRALS FOR A MAXIMUM TOTAL OF SIX CURRENT CARRYING CONDUCTORS. ALL BRANCH CIRCUITS LARGER THAN 20A SHALL BE SEPARATELY HOMERUN TO THE PANEL.
21. COORDINATE WITH THE CABLE TV AND TELEPHONE UTILITIES AS REQUIRED FOR SERVICE ENTRANCE REQUIREMENTS. INSTALLATION MUST COMPLY WITH THEIR RESPECTIVE REGULATIONS AND REQUIREMENTS.
22. RECEPTACLES SHALL BE SPECIFICATION GRADE EQUAL TO HUBBELL 5300 SERIES, GROUND FAULT RECEPTACLES SHALL BE HUBBELL GF-5362. LIGHTING SWITCHES SHALL BE SPECIFICATION GRADE EQUAL TO HUBBELL 1200 SERIES.
23. ALL EXTERIOR FIXTURES AND DEVICES SHALL BE RATED FOR OPERATION AT 0° F AND SHALL BE DAMP OR WET LABELED AS REQUIRED.
24. THE ELECTRICAL CONTRACTOR SHALL BE RESPONSIBLE FOR INSTALLING ALL ELECTRICAL EQUIPMENT, DEVICES, ETC. IN ACCORDANCE WITH LOCAL SEISMIC CODE REQUIREMENTS. PROVIDE SEISMIC RESTRAINTS, ACCESSORIES AND INSTALLATION DETAIL AS REQUIRED.
25. ELECTRICAL CONTRACTOR TO COORDINATE THE EXACT MCA/MOCP REQUIREMENTS OF ALL EQUIPMENT WITH ALL OTHER TRADES PRIOR TO PRICING, ORDERING, OR INSTALLING ANY ELECTRICAL GEAR. THIS SHALL INCLUDE BUT NOT LIMITED TO ALL HVAC, PLUMBING, KITCHEN, OWNER PROVIDED EQUIPMENT, ETC.

ELECTRICAL SYMBOL LEGEND

	CIRCUIT CONDUCTORS CONCEALED IN FLOOR, WALL OR CEILING.
	ARROWHEAD INDICATES HOMERUN TO PANEL NOTED.
	INDICATES HOT LEG OF CIRCUIT TO BE CARRIED OVER TO NEXT DEVICE. SEE PLANS FOR CONTROL SCHEME.
J	JUNCTION BOX WALL, FLOOR, OR CEILING MOUNTED.
$	SINGLE POLE SWITCH, 20A, 120/277 VOLT, 48" A.F.F. TO CENTER. "3" INDICATES 3-WAY SWITCH. "4" INDICATES 4-WAY SWITCH. "D" INDICATES DIMMER SWITCH OF TYPE TO SUIT LOAD. "K" INDICATES KEY OPERATED SWITCH. "T" INDICATES 120V, 20A MOTOR RATED TOGGLE SWITCH.
	DUPLEX RECEPTACLE, 15 AMP, 120 VOLT, 24" A.F.F. TO BOTTOM UNLESS NOTED OTHERWISE "GFI" INDICATES GROUND FAULT CIRCUIT INTERRUPTER TYPE "WP" INDICATES WEATHERPROOF "EWC" INDICATES GFI TYPE RECEPTACLE MOUNT INSIDE ENCLOSURE OF ELECTRIC WATER COOLER. "USB" INDICATES PROVIDE RECEPTACLE WITH (2) USB CHARGING PORTS.
	QUADRUPLEX RECEPTACLE, AS ABOVE, 24" A.F.F. TO BOTTOM UNLESS NOTED OTHERWISE
30/3/FPN	HEAVY DUTY FUSIBLE/NON-FUSIBLE DISCONNECT SWITCH, NUMBERS INDICATE FRAME SIZE, NUMBER OF POLES AND FUSING. PROVIDE NEMA 1 ENCLOSURE INSIDE. PROVIDE NEMA 3 ENCLOSURE FOR ALL SWITCHES LOCATED OUTSIDE. "FPN" INDICATES FUSE PER EQUIPMENT NAMEPLATE "NF" INDICATES NON-FUSED.
	208Y/120V PANEL, SURFACE OR RECESS MOUNTED, SEE SCHEDULE FOR DETAILS.
	FAN, PROVIDED AND INSTALLED BY MECHANICAL CONTRACTOR, WIRED BY ELECTRICAL CONTRACTOR. PROVIDE DISCONNECTING MEANS AS REQUIRED.
	WATER HEATER, PROVIDED AND INSTALLED BY PLUMBING CONTRACTOR, WIRED BY ELECTRICAL CONTRACTOR. PROVIDE DISCONNECTING MEANS AS REQUIRED.
	RECESSED MOUNTED 2x4 FLUORESCENT TROFFER, SEE FIXTURE SCHEDULE FOR DETAILS.
	TRACK LIGHTING FIXTURE, SEE FIXTURE SCHEDULE FOR DETAILS.
	SURFACE MOUNTED FLUORESCENT STRIP, SEE FIXTURE SCHEDULE FOR DETAILS.
	WALL MOUNTED LIGHTING FIXTURE, SEE FIXTURE SCHEDULE FOR DETAILS.
	SURFACE, RECESSED OR GROUND MOUNTED LIGHTING FIXTURE, SEE FIXTURE SCHEDULE FOR DETAILS.
	ELECTRIC UTILITY METER LOCATION.
	EXIT LIGHT, CEILING AND WALL MOUNTED RESPECTIVELY, SHADING INDICATES FACE. PROVIDE RED LETTERS WITH WHITE HOUSING AND EMERGENCY BATTERY PACK RATED FOR 90 MINUTE DURATION. WIRE TO HOT LEG OF LOCAL LIGHTING CIRCUIT.
	EMERGENCY LIGHT, WALL MOUNTED WITH EMERGENCY BATTERY PACK RATED FOR FOR 90 MINUTE DURATION. WIRE TO HOT LEG OF LOCAL LIGHTING CIRCUIT.
	REMOTE MOUNTED LAMP HEAD, WALL MOUNTED WITH EMERGENCY BATTERY PACK RATED FOR 90 MINUTE DURATION. WIRE TO HOT LEG OF LOCAL LIGHTING CIRCUIT.
	COMBO EMERGENCY/EXIT LIGHT, CEILING AND WALL MOUNTED RESPECTIVELY, SHADING INDICATES FACE. PROVIDE RED LETTERS WITH WHITE HOUSING AND EMERGENCY BATTERY PACK RATED FOR 90 MINUTE DURATION. WIRE TO HOT LEG OF LOCAL LIGHTING CIRCUIT.
CLG	DUAL TECHNOLOGY CEILING MOUNTED OCCUPANCY SENSOR SET FOR 30 MINUTES.
	WALL MOUNTED AT 46"AFF OCCUPANCY SENSOR SET FOR 30 MINUTES.
SWD	WALL MOUNTED AT 46"AFF OCCUPANCY SENSOR WITH INTEGRAL DIMMER SWITCH SET FOR 30 MINUTES.
TV	CABLE TV OUTLET, 18" A.F.F. TO CENTER, UNLESS OTHERWISE NOTED. PROVIDE J-BOX AND EMPTY ¾"C TO ABOVE ACCESSIBLE CEILING.
T	TELEPHONE/DATA OUTLET, 18" A.F.F. TO CENTER, UNLESS OTHERWISE NOTED. PROVIDE J-BOX AND EMPTY ¾" CONDUIT TO ABOVE ACCESSIBLE CEILING.
D	DUCT MOUNTED SMOKE DETECTOR, CONNECT TO 120V CIRCUIT INDICATED. DETECTOR SHALL BE SUPPLIEDBY E.C. AND INSTALLED BY M.C., 120V WIRING BY E.C.
	DUCT DETECTOR AUDIO/VISUAL DEVICE WITH REMOTE TEST SWITCH MOUNTED 46"AFF. SEE WIRING DIAGRAM ON SHEET E1 FOR DETAILS.

ELECTRICAL ABBREVIATIONS

18"	DIMENSION INDICATES HEIGHT ABOVE FINISHED FLOOR AT WHICH CENTER OF DEVICE IS TO BE MOUNTED.
AFF	ABOVE FINISHED FLOOR.
AFG	ABOVE FINISHED GRADE.
EC	ELECTRICAL CONTRACTOR.
FPN	FUSE PER EQUIPMENT NAMEPLATE REQUIREMENTS.
GC	GENERAL CONTRACTOR.
MC	MECHANICAL CONTRACTOR.
PC	PLUMBING CONTRACTOR.
WP	INDICATES DEVICE TO HAVE WEATHERPROOF COVER.
UON	UNLESS OTHERWISE NOTED.
FACP	FIRE ALARM CONTROL PANEL.

ELECTRICAL DEMOLITION NOTES

1. DRAWINGS ARE BASED ON EXISTING PLANS AND NON-DESTRUCTIVE FIELD INVESTIGATIONS. THE CONTRACTOR SHALL VISIT THE EXISTING BUILDING AND FAMILIARIZE HIMSELF WITH THE EXISTING CONDITIONS PRIOR TO PRICING. THE CONTRACTOR SHALL EXAMINE RELATED DRAWINGS TO AVOID CONFLICTS.
2. PROVIDE ELECTRICAL DEMOLITION WORK AS NECESSARY TO INSTALL NEW WORK. ELECTRICAL CONTRACTOR SHALL REROUTE AND RECONNECT ANY CIRCUITS THAT WILL REMAIN IN USE BUT INTERFERES WITH NEW CONSTRUCTION.
3. MATERIAL BEING REMOVED UNDER DEMOLITION (AND NOT TO BEING RELOCATED) SHALL BECOME THE PROPERTY OF THE CONTRACTOR AND SHALL BE REMOVED COMPLETELY FROM THE SITE, UNLESS OTHERWISE NOTED.
4. EXISTING CONDUITS THAT WILL NOT BE REUSED SHALL BE REMOVED IN CEILING PLENUMS AND WALLS. OTHERS MAY BE ABANDONED BELOW FLOOR SLABS. CONTRACTOR SHALL REMOVE ALL WIRING FROM ABANDONED CONDUITS. CUT-OFF ABANDONED CONDUITS BELOW FLOOR AND GROUT FLUSH WITH NON-CONTRACTING GROUT.
5. ABANDONED DEVICES SHALL BE REMOVED WITH THE JUNCTION BOX. WALLS SHALL BE PATCHED TO MATCH ADJACENT SURFACES.
6. CONTRACTOR SHALL EXERCISE CARE IN REMOVING DEMOLITION ITEMS AND SHALL REPAIR OR REPLACE AT HIS COST ANY DAMAGE CAUSED TO EXISTING CONSTRUCTION AND EQUIPMENT TO REMAIN.
7. SCHEDULE WORK IN EXISTING BUILDING AT TIME CONVENIENT TO OWNER.
8. DEVICES TO BE REMOVED AND NOT REINSTALLED SHALL HAVE JUNCTION BOXES, CONDUCTORS, CONDUIT AND ALL ASSOCIATED APPURTENANCES REMOVED BACK TO LAST ACTIVE DEVICE OR PANELBOARD.

SABER ENGINEERING
2923 South Tryon Street Suite 280
Charlotte, North Carolina 28203
tel 704.373.0068
MECHANICAL ELECTRICAL PLUMBING

SOUTH CAROLINA SABER ENGINEERING,PA No. C02383 CERTIFICATE OF AUTHORIZATION

SOUTH CAROLINA REGISTERED PROFESSIONAL ENGINEER JOHN M. MORRISON JR. May 01, 2018

FIRM NUMBER = C-2130

NEWBERRY COUNTY AIRPORT

NEW TERMINAL RENOVATION & EXPANSION

ARCHITECT
THE WILSON GROUP
P O BOX 5510
CHARLOTTE, NC 28299
(704) 331-8747

PROJECT MANAGER | CIVIL ENGINEER
TALBERT, BRIGHT & ELLINGTON
2000 PARK STREET, SUITE 101
COLUMBIA, SC 29201
(803) 933-9290

STRUCTURAL ENGINEER
STEWART
101 N. TRYON ST., SUITE 1400
CHARLOTTE, NC 28202
(704) 909-3523

MECHANICAL, ELECTRICAL, & PLUMBING ENGINEER
SABER ENGINEERING
2923 S. TRYON ST., SUITE 280
CHARLOTTE, NC 28203
(704) 373-0068

REVISIONS

DATE	MAY 1, 2018
PROJECT NUMBER	9198-000

SHEET TITLE

ELECTRICAL NOTES, LEGEND, AND SCHEDULES

SHEET NUMBER

E1

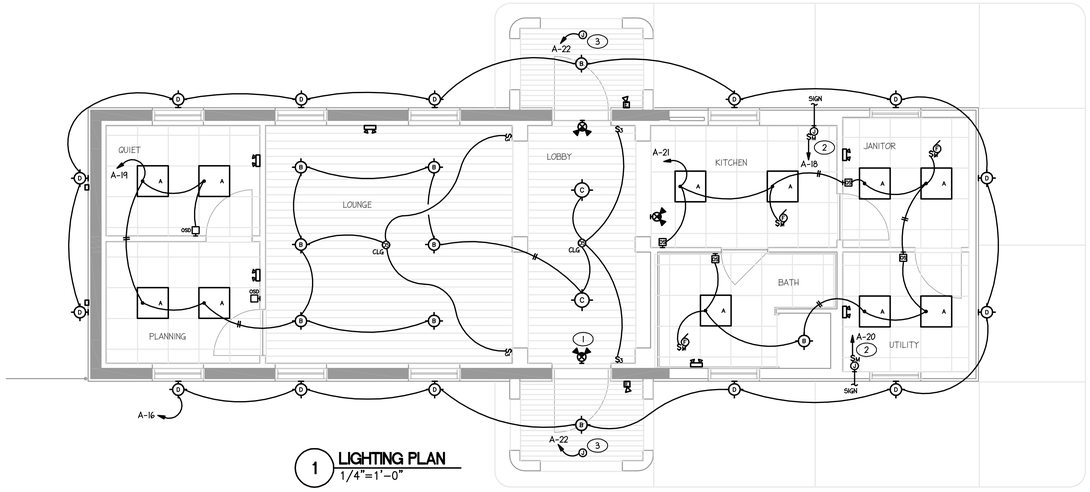

1 LIGHTING PLAN
1/4"=1'-0"

NOTES:

1. CONNECT ALL EXIT AND EMERGENCY LIGHTS TO NEAREST UNSWITCHED LEG OF LOCAL LIGHTING CIRCUIT, TYPICAL FOR EACH.
2. PROVIDE 120V CONNECTION FOR SIGN. FIELD COORDINATE EXACT SIGN CONNECTION LOCATION WITH G.C./OWNER.
3. RECESS TOWER ELEMENT LOCATION. NOTE THERE ARE (8) ON EACH TOWER ELEMENT, (4) ON THE FRONT AND (2) ON EACH SIDE. PROVIDE 11" OF LIGHT FIXTURE TYPE E ALONG BOTTOM OF EACH RECESS TOWER ELEMENT. SEE DETAIL 6 THIS SHEET FOR DETAILS.

E.C. TO PROVIDE ALL ELECTRICAL DEMOLITION WORK AS REQUIRED TO PROVIDE NEW WORK. E.C. TO VISIT THE SITE PRIOR TO BID TO FAMILIARIZE THEMSELVES WITH THE EXTENT OF THE DEMO AND NEW WORK. ALL WORK TO BE INCLUDED IN FINAL BID.

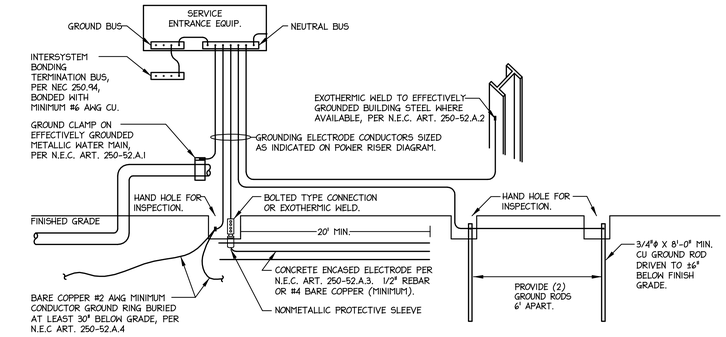

4 GROUNDING DETAIL
NTS

GROUNDING ELECTRODES SHALL BE PROVIDED IN ACCORDANCE WITH NEC SECTION 250. ALL GROUNDING ELECTRODE CONDUCTORS SIZED AS INDICATED ON POWER RISER DIAGRAM. **ALL METHODS OF CREATING THE GROUNDING SYSTEM MAY NOT BE REQUIRED OR AVAILABLE.**

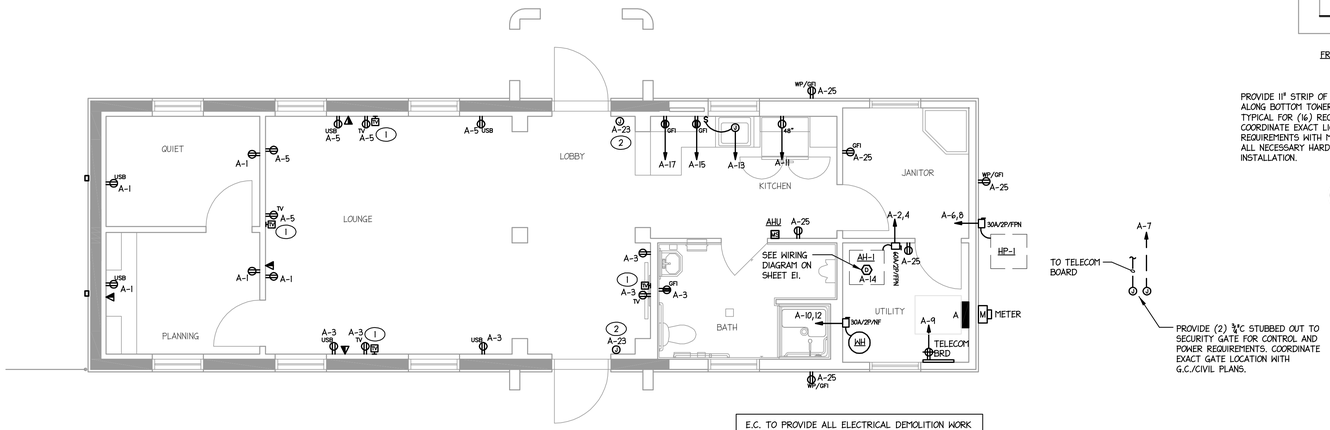

2 POWER PLAN
1/4"=1'-0"

E.C. TO PROVIDE ALL ELECTRICAL DEMOLITION WORK AS REQUIRED TO PROVIDE NEW WORK. E.C. TO VISIT THE SITE PRIOR TO BID TO FAMILIARIZE THEMSELVES WITH THE EXTENT OF THE DEMO AND NEW WORK. ALL WORK TO BE INCLUDED IN FINAL BID.

NOTES:

1. FIELD COORDINATE EXACT RECEPTACLE AND CATV HEIGHT FOR WALL MOUNTED TV WITH OWNER PRIOR TO ROUGH-IN.
2. FIELD COORDINATE WITH G.C. TO PROVIDE 120V CONNECTION FOR DOOR PANIC HARDWARE.

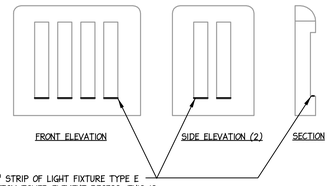

PROVIDE 11" STRIP OF LIGHT FIXTURE TYPE E ALONG BOTTOM TOWER ELEMENT RECESS. THIS IS TYPICAL FOR (16) RECESS TOWER ELEMENTS. COORDINATE EXACT LIGHT FIXTURE EQUIPMENT REQUIREMENTS WITH MANUFACTURER. PROVIDE ALL NECESSARY HARDWARE FOR COMPLETE INSTALLATION.

6 TOWER ELEMENT LIGHTS
1/4"=1'-0"

ALL EXISTING ELECTRICAL SERVICE TO BE REMOVED.

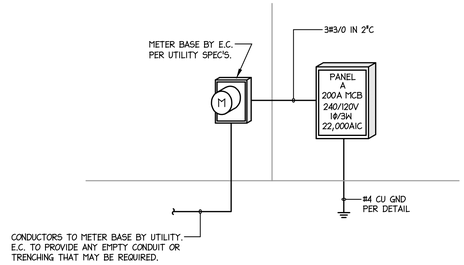

5 POWER RISER DIAGRAM
NTS

COORDINATE EXACT ELECTRICAL SERVICE REQUIREMENTS WITH LOCAL UTILITY PRIOR TO PROJECT START UP.

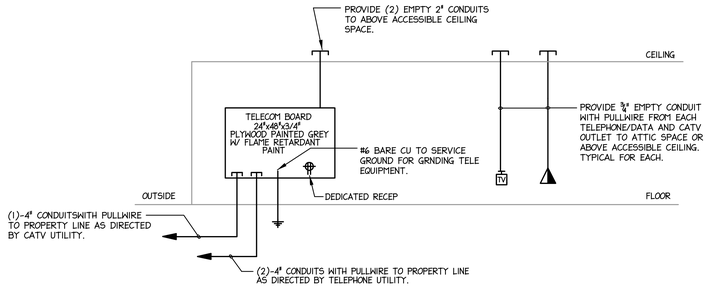

3 TELECOM RISER DIAGRAM
NO SCALE

NOTES:

1. COORDINATE EXACT CATV, TELEPHONE AND DATA WIRING REQUIREMENTS WITH OWNER PRIOR TO PROJECT START UP.
2. COORDINATE ALL CATV AND TELEPHONE SERVICE WORK WITH LOCAL UTILITY PRIOR TO PROJECT START UP.

A DEMAND CALCS

LIGHTING		4.40	KVA	X	125	%	=	5.5 KVA
RECEPTACLE	TOTAL	5.40	KVA					
	1ST	10.00	KVA	X	100	%	=	5.4 KVA
	REMAIN	0.00	KVA	X	50	%	=	0.0 KVA
MOTORS		0.60	KVA	X	100	%	=	0.6 KVA
A/C		5.00	KVA	X	100	%	=	5.0 KVA
HEATING		12.50	KVA	X	100	%	=	12.5 KVA
FUTURE		_____	KVA	X	100	%	=	0.0 KVA
KITCHEN		0.00	KVA	X	65	%	=	0.0 KVA
MISCELLANEOUS		1.80	KVA	X	100	%	=	1.8 KVA
TOTAL	=	128.3 amps					=	30.8 KVA

PANELBOARD SCHEDULE - "A"

MAIN: 200A MCB | VOLTAGE: 240/120 | PHASE: 1 | WIRE: 3 | MOUNTING: SURFACE | AIC:

NOTES:

CKT #	BKR TRIP	POLE	WIRE SIZE	COND SIZE	DESCRIPTION	LOAD (KVA) LTG	REC	MTR	A/C	HTG	KIT	MISC	PHASE A	PHASE B	LOAD (KVA) LTG	REC	MTR	A/C	HTG	KIT	MISC	DESCRIPTION	COND SIZE	WIRE SIZE	POLE	BKR TRIP	CKT #
1	20	1	12	1/2"	RECEPTACLES		0.9												4.0			AH-1	1"	6	2	50	2
3	20	1	12	1/2"	RECEPTACLES		1.1												4.0								4
5	20	1	12	1/2"	RECEPTACLES		0.9											2.5				HP-1	3/4"	10	2	30	6
7	20	1	12	1/2"	SECURITY GATE							0.5						2.5									8
9	20	1	12	1/2"	TELECOM RECEP'S		0.4												2.3			WATER HEATER	3/4"	10	2	30	10
11	20	1	12	1/2"	REFRIGERATOR - GFI							1.0							2.2								12
13	20	1	12	1/2"	DISPOSAL			0.6													0.1	DUCT DETECTOR - L	1/2"	12	1	20	14
15	20	1	12	1/2"	COUNTER RECEP		0.5								0.5							EXTERIOR LTS - PC/TC	1/2"	12	1	20	16
17	20	1	12	1/2"	COUNTER RECEP		0.5								1.0							EXTERIOR SIGN - PC/TC	1/2"	12	1	20	18
19	20	1	12	1/2"	LIGHTS	0.8									1.0							EXTERIOR SIGN - PC/TC	1/2"	12	1	20	20
21	20	1	12	1/2"	LIGHTS	0.5									0.3							EXTERIOR LTS - PC/TC	1/2"	12	1	20	22
23	20	1	12	1/2"	DOOR PANIC HARDWARE							0.2			0.3							EXTERIOR LTS - PC/TC	1/2"	12	1	20	24
25	20	1	12	1/2"	RECEPTACLES		1.1															SPARE	1/2"	12	1	20	26
27	20	1	12	1/2"	SPARE																	SPARE	1/2"	12	1	20	28
29	20	1	12	1/2"	SPARE																	SPARE	1/2"	12	1	20	30
31					SPACE																	SPACE					32
33					SPACE																	SPACE					34
35					SPACE																	SPACE					36
37					SPACE																	SPACE					38
39					SPACE																	SPACE					40
41					SPACE																	SPACE					42
LIGHTING (KVA):					4.4	1.3	5.4	0.6	0.0	0.0	0.0	1.7			3.1	0.0	0.0	5.0	12.5	0.0	0.1	CONNECTED LOAD (KVA):				29.7	
RECEPTACLES (KVA):					5.4																	DEMAND LOAD (KVA):				30.8	
MOTORS (KVA):					0.6							PHASE A	15.1	125.8													
A/C (KVA):					5.0							PHASE B	14.6	121.7								CONNECTED LOAD (AMPS):				123.8	
HEATING (KVA):					12.5								KVA	AMPS								DEMAND LOAD (AMPS):				128.3	
KITCHEN (KVA):					0.0																						
MISCELLANEOUS (KVA):					1.8																						

1. PANEL SHALL BE SERVICE ENTRANCE RATED.
2. L - INDICATES LOCK-ON ATTACHMENT REQUIRED.
3. PROVIDE SWD/HID RATED BREAKERS FOR LIGHTING CIRCUITS.
4. PROVIDE HACR BREAKERS FOR HVAC EQUIPMENT.
5. PC/TC - CIRCUIT THROUGH 120V 2000W PHOTO-CELL AND 7-DAY TIMECLOCK FOR PHOTOCELL ON, TIMECLOCK OFF CONTROL. LOCATE TIMECLOCK ADJACENT TO PANEL AND LOCATE PHOTOCELL ON NORTH SIDE OF BUILDING. PROVIDE 20A, 4-POLE, ELECTRONICALLY HELD LIGHTING CONTACTORS AS REQUIRED FOR MULTIPLE CIRCUIT CONTROL, QUANTITY AS REQUIRED. ALL CONTACTORS AND TIMECLOCK TO BE LOCATED IN NEMA 1 ENCLOSURES NEXT TO PANEL.
6. GFI - PROVIDE GFI BREAKER.

SABER ENGINEERING
2923 South Tryon Street Suite 280
Charlotte, North Carolina 28203
tel 704.373.0068
MECHANICAL ELECTRICAL PLUMBING

SOUTH CAROLINA PROFESSIONAL ENGINEERING SEAL — SABER ENGINEERING, PA — No. C02383 — CERTIFICATE OF AUTHORIZATION

SOUTH CAROLINA PROFESSIONAL ENGINEER SEAL — RICHARD M. MORRISON JR. — May 01, 2018

FIRM NUMBER = C-2130

NEWBERRY COUNTY AIRPORT

NEW TERMINAL RENOVATION & EXPANSION

ARCHITECT
THE WILSON GROUP
P O BOX 5510
CHARLOTTE, NC 28299
(704) 331-9747

PROJECT MANAGER | CIVIL ENGINEER
TALBERT, BRIGHT & ELLINGTON
2000 PARK STREET, SUITE 101
COLUMBIA, SC 29201
(803) 933-9290

STRUCTURAL ENGINEER
STEWART
101 N. TRYON ST., SUITE 1400
CHARLOTTE, NC 28202
(704) 909-3523

MECHANICAL, ELECTRICAL, & PLUMBING ENGINEER
SABER ENGINEERING
2923 S. TRYON ST., SUITE 280
CHARLOTTE, NC 28203
(704) 373-0068

REVISIONS

DATE MAY 1, 2018

PROJECT NUMBER 9198-000

SHEET TITLE

ELECTRICAL FLOOR PLANS

SHEET NUMBER

E2

COM*check* Software Version 4.0.8.1

Interior Lighting Compliance Certificate

Section 1: Project Information

Energy Code: **2009 IECC**
Project Title: Newberry County Airport Terminal
Project Type: New Construction

Construction Site: Newberry, SC
Owner/Agent:
Designer/Contractor:

Section 2: Interior Lighting and Power Calculation

A Area Category	B Floor Area (ft2)	C Allowed Watts / ft2	D Allowed Watts (B x C)
Office	1030	1	1030
		Total Allowed Watts =	1030

Section 3: Interior Lighting Fixture Schedule

A Fixture ID : Description / Lamp / Wattage Per Lamp / Ballast	B Lamps/ Fixture	C # of Fixtures	D Fixture Watt.	E (C X D)
Office (1030 sq.ft.)				
LED 1: A: 2x2 troffer: LED Panel 36W:	1	11	35	385
LED 2: B: down light: LED A Lamp 25W:	1	7	26	182
LED 3: C: pendant light: LED Other Fixture Unit 50W:	1	2	50	100
			Total Proposed Watts =	667

Section 4: Requirements Checklist

Interior Lighting PASSES: Design 35% better than code.

Lighting Wattage:

☐ 1. Total proposed watts must be less than or equal to total allowed watts.

Allowed Watts	Proposed Watts	Complies
1030	667	YES

Controls, Switching, and Wiring:

☐ 2. Daylight zones under skylights more than 15 feet from the perimeter have lighting controls separate from daylight zones adjacent to vertical fenestration.
☐ 3. Daylight zones have individual lighting controls independent from that of the general area lighting.

Exceptions:

☐ Contiguous daylight zones spanning no more than two orientations are allowed to be controlled by a single controlling device.
☐ Daylight spaces enclosed by walls or ceiling height partitions and containing two or fewer light fixtures are not required to have a separate switch for general area lighting.

☐ 4. Independent controls for each space (switch/occupancy sensor).

Exceptions:

☐ Areas designated as security or emergency areas that must be continuously illuminated.
☐ Lighting in stairways or corridors that are elements of the means of egress.

☐ 5. Master switch at entry to hotel/motel guest room.
☐ 6. Individual dwelling units separately metered.
☐ 7. Medical task lighting or art/history display lighting claimed to be exempt from compliance has a control device independent of the control of the nonexempt lighting.
☐ 8. Each space required to have a manual control also allows for reducing the connected lighting load by at least 50 percent by either controlling all luminaires, dual switching of alternate rows of luminaires, alternate luminaires, or alternate lamps, switching the middle lamp luminaires independently of other lamps, or switching each luminaire or each lamp.

Exceptions:

☐ Only one luminaire in space.
☐ An occupant-sensing device controls the area.
☐ The area is a corridor, storeroom, restroom, public lobby or sleeping unit.
☐ Areas that use less than 0.6 Watts/sq.ft.

☐ 9. Automatic lighting shutoff control in buildings larger than 5,000 sq.ft.

Exceptions:

☐ Sleeping units, patient care areas; and spaces where automatic shutoff would endanger safety or security.

☐ 10. Photocell/astronomical time switch on exterior lights.

Exceptions:

☐ Lighting intended for 24 hour use.

☐ 11. Tandem wired one-lamp and three-lamp ballasted luminaires (No single-lamp ballasts).

Exceptions:

☐ Electronic high-frequency ballasts; Luminaires on emergency circuits or with no available pair.

Section 5: Compliance Statement

Compliance Statement: The proposed lighting design represented in this document is consistent with the building plans, specifications and other calculations submitted with this permit application. The proposed lighting system has been designed to meet the 2009 IECC requirements in COM*check* Version 4.0.8.1 and to comply with the mandatory requirements in the Requirements Checklist.

Name - Title	Signature	Date
RICK MORRISON – ELECTRICAL ENGINEER		4-27-18

COM*check* Software Version 4.0.8.1

Exterior Lighting Compliance Certificate

Section 1: Project Information

Energy Code: **2009 IECC**
Project Title: Newberry County Airport Terminal
Project Type: New Construction
Exterior Lighting Zone: 1 (Developed rural area)

Construction Site: Newberry, SC
Owner/Agent:
Designer/Contractor:

Section 2: Exterior Lighting Area/Surface Power Calculation

A Exterior Area/Surface	B Quantity	C Allowed Watts / Unit	D Tradable Wattage	E Allowed Watts (B x C)	F Proposed Watts
Main entry	6 ft of door width	20	Yes	120	0
Entry canopy	120 ft2	0.25	Yes	30	52
Illuminated area of facade wall or surface	580 ft2	0	No	0	360
			Total Tradable Watts* =	150	52
			Total Allowed Watts =	150	
			Total Allowed Supplemental Watts** =	500	

* Wattage tradeoffs are only allowed between tradable areas/surfaces.
** A supplemental allowance equal to 500 watts may be applied toward compliance of both non-tradable and tradable areas/surfaces.

Section 3: Exterior Lighting Fixture Schedule

A Fixture ID : Description / Lamp / Wattage Per Lamp / Ballast	B Lamps/ Fixture	C # of Fixtures	D Fixture Watt.	E (C X D)
Main entry (6 ft of door width): Tradable Wattage				
Entry canopy (120 ft2): Tradable Wattage				
LED 1: B: down light: LED A Lamp 25W:	1	2	26	52
Illuminated area of facade wall or surface (580 ft2): Non-tradable Wattage				
LED 2: D: wall sconce: LED A Lamp 25W:	1	14	20	280
LED 3: E: led tape light: LED Linear 8W:	1	16	5	80
			Total Tradable Proposed Watts =	52

Section 4: Requirements Checklist

Lighting Wattage:

☐ 1. Within each non-tradable area/surface, total proposed watts must be less than or equal to total allowed watts. Across all tradable areas/surfaces, total proposed watts must be less than or equal to total allowed watts.
Compliance: Passes.

Controls, Switching, and Wiring:

☐ 2. All exemption claims are associated with fixtures that have a control device independent of the control of the nonexempt lighting.
☐ 3. Lighting not designated for dusk-to-dawn operation is controlled by either a a photosensor (with time switch), or an astronomical time switch.
☐ 4. Lighting designated for dusk-to-dawn operation is controlled by an astronomical time switch or photosensor.

☐ 5. All time switches are capable of retaining programming and the time setting during loss of power for a period of at least 10 hours.

Exterior Lighting Efficacy:

☐ 6. All exterior building grounds luminaires that operate at greater than 100W have minimum efficacy of 60 lumen/watt.

Exceptions:

☐ Lighting that has been claimed as exempt and is identified as such in Section 3 table above.
☐ Lighting that is specifically designated as required by a health or life safety statue, ordinance, or regulation.
☐ Emergency lighting that is automatically off during normal building operation.
☐ Lighting that is controlled by motion sensor.

Section 5: Compliance Statement

Compliance Statement: The proposed exterior lighting design represented in this document is consistent with the building plans, specifications and other calculations submitted with this permit application. The proposed lighting system has been designed to meet the 2009 IECC requirements in COM*check* Version 4.0.8.1 and to comply with the mandatory requirements in the Requirements Checklist.

Name - Title	Signature	Date
RICK MORRISON – ELECTRICAL ENGINEER		4-27-18

SABER ENGINEERING
2923 South Tryon Street Suite 280
Charlotte, North Carolina 28203
tel 704.373.0068
MECHANICAL ELECTRICAL PLUMBING

SOUTH CAROLINA SABER ENGINEERING,PA No. C02383 CERTIFICATE OF AUTHORIZATION

SOUTH CAROLINA PROFESSIONAL ENGINEER RICHARD W. MORRISON, JR.
May 01, 2018

FIRM NUMBER = C-2130

NEWBERRY COUNTY AIRPORT

NEW TERMINAL RENOVATION & EXPANSION

ARCHITECT

THE WILSON GROUP
P O BOX 5510
CHARLOTTE, NC 28299
(704) 331-9747

PROJECT MANAGER | CIVIL ENGINEER

TALBERT, BRIGHT & ELLINGTON
2000 PARK STREET, SUITE 101
COLUMBIA, SC 29201
(803) 933-9290

STRUCTURAL ENGINEER

STEWART
101 N. TRYON ST., SUITE 1400
CHARLOTTE, NC 28202
(704) 909-3523

MECHANICAL, ELECTRICAL, & PLUMBING ENGINEER

SABER ENGINEERING
2923 S. TRYON ST., SUITE 280
CHARLOTTE, NC 28203
(704) 373-0068

REVISIONS

DATE	MAY 1, 2018
PROJECT NUMBER	9198-000

SHEET TITLE

ELECTRICAL COMCHECK

SHEET NUMBER

E3